Jolico/J-B Tool, Inc.

GLOBAL SUPPLIER OF DIE & AUTOMATION COMPONENTS
4325 22 Mile Road, Utica, MI 48317-1507
Phone: 586.739.5555 Fax: 586.739.4840

Chrysler Metric Catalog

SERVING THE TOOL & DIE INDUSTRY SINCE 1956

JOLICO J-B TOOL

PRINTED COPY IS UNCONTROLLED

SELF LUBE WEARSTRIPS

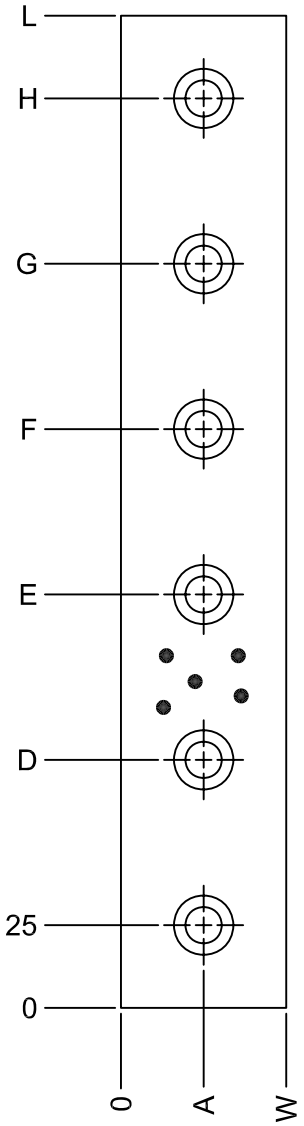

HOLE PATTERN (A)

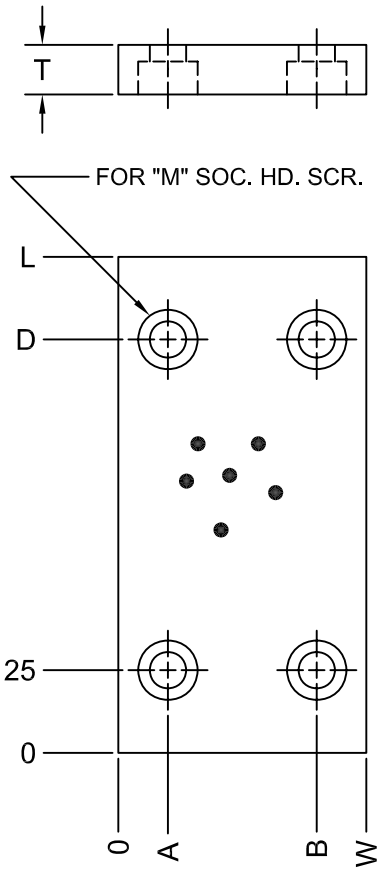

HOLE PATTERN (B)

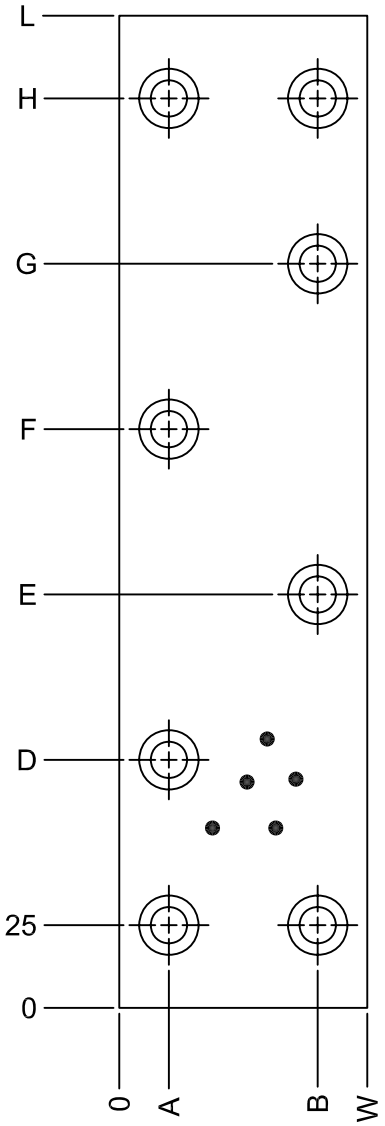

HOLE PATTERN (C)

JOLICO NUMBER	CHRYSLER CC NUMBER	L	W	T	A	B	D	E	F	G	H	SCREW HOLE	
												SIZE	PATT.
J-442802	19-296-1203	150	50	10	25	--	75	125	---	---	---	M6	A
J-442804	19-296-1205	150	75	10	15	60	125	---	---	---	---	M6	B
J-442810	19-296-1223	150	50	12	25	--	75	125	---	---	---	M8	A
J-442812	19-296-1225	150	75	12	15	60	125	---	---	---	---	M8	B
J-442818	19-296-1253	150	50	15	25	--	75	125	---	---	---	M10	A
J-442820	19-296-1255	150	75	15	15	60	125	---	---	---	---	M10	B
J-442834	19-296-1403	300	50	10	25	--	75	125	175	225	275	M6	A
J-442836	19-296-1405	300	75	10	15	60	75	125	175	225	275	M6	C
J-442842	19-296-1423	300	50	12	25	--	75	125	175	225	275	M8	A
J-442844	19-296-1425	300	75	12	15	60	75	125	175	225	275	M8	C
J-442850	19-296-1453	300	50	15	25	--	75	125	175	225	275	M10	A
J-442852	19-296-1455	300	75	15	15	60	75	125	175	225	275	M10	C

JOLICO J-B TOOL

PRINTED COPY IS UNCONTROLLED

STEEL WEAR PLATES WITH GRAPHITE PLUGS

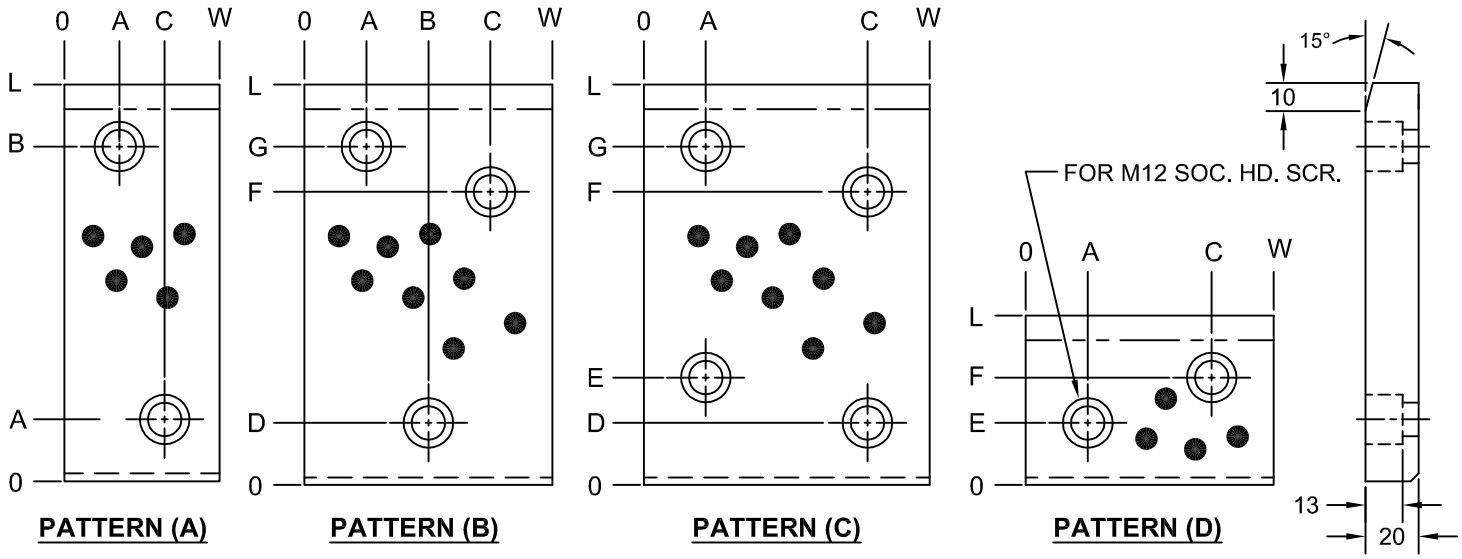

JOLICO NUMBER	CHRYSLER CC NUMBER	WIDTH	LENGTH	A	B	C	D	E	F	G	SCREW HOLE	
											AMT.	PATT.
J-442001	19-296-7204	50	100	25		25	30			60	2	A
J-442105	19-296-7206	50	150	25		25	30			110	2	A
J-442002	19-296-7208	50	200	25		25	40			160	2	A
J-442003	19-296-7304	80	100	20		60	30			60	2	A
J-442004	19-296-7306	80	150	20		60	30			110	2	A
J-442005	19-296-7308	80	200	20		60	40			160	2	A
J-442006	19-296-7310	80	250	20		60	40			210	2	A
J-442007	19-296-7312	80	315	20	40	60	40		250	275	3	B
J-442120	19-296-7402	100	50	22		78		14	27		2	D
J-442121	19-296-7403	100	80	22		78		30	50		2	D
J-442008	19-296-7404	100	100	22		78	30			60	2	A
J-442009	19-296-7406	100	150	22		78	30			110	2	A
J-442010	19-296-7408	100	200	22	50	78	40		135	160	3	B
J-442011	19-296-7410	100	250	22	50	78	40		185	210	3	B
J-442012	19-296-7412	100	315	22	50	78	40		250	275	3	B
J-442013	19-296-7504	125	80	25		100		30	50		2	D
J-442122	19-296-7503	125	100	25		100	30			60	2	A
J-442014	19-296-7506	125	150	25		100	30			110	2	A
J-442015	19-296-7508	125	200	25	62	100	40		135	160	3	B
J-442016	19-296-7510	125	250	25	62	100	40		185	210	3	B
J-442017	19-296-7512	125	315	25		100	40	65	250	275	4	C
J-442018	19-296-7604	160	100	30		130	30			60	2	A
J-442019	19-296-7606	160	150	30		130	30			110	2	A
J-442020	19-296-7608	160	200	30	80	130	40		135	160	3	B
J-442021	19-296-7610	160	250	30		130	40	65	185	210	4	C
J-442022	19-296-7612	160	315	30		130	40	65	250	275	4	C

JOLICO J-B TOOL

PRINTED COPY IS UNCONTROLLED

STEEL WEAR PLATES NO GRAPHITE PLUGS

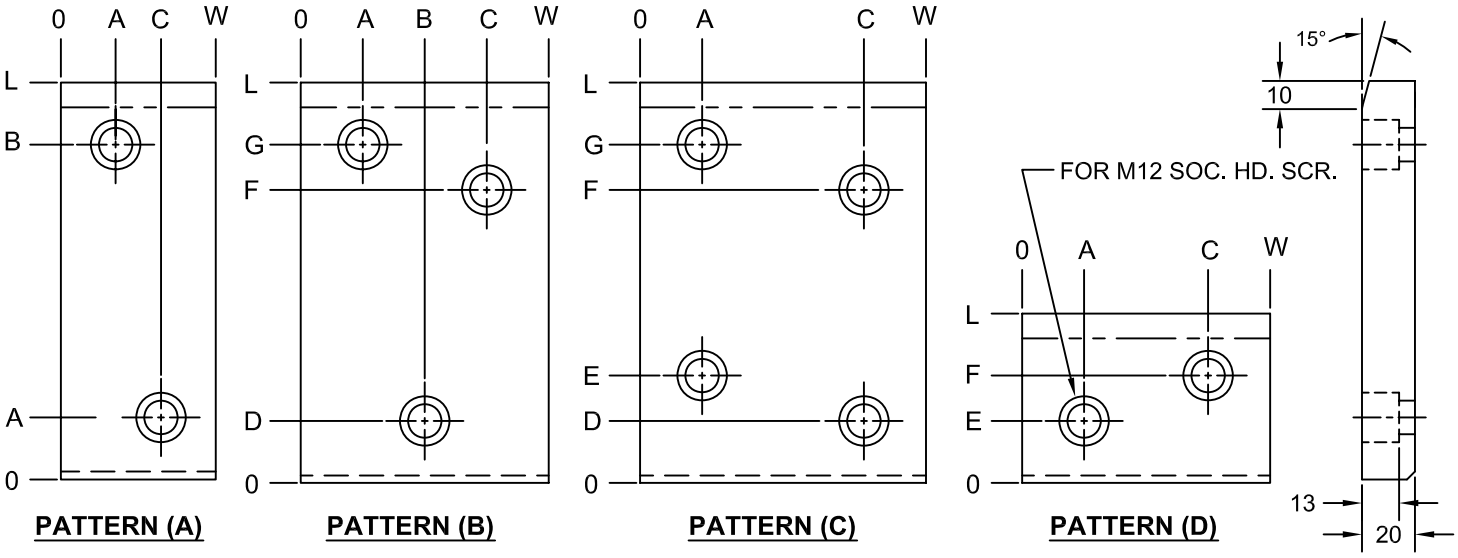

JOLICO NUMBER	CHRYSLER CC NUMBER	WIDTH	LENGTH	A	B	C	D	E	F	G	SCREW HOLE	
											AMT.	PATT.
J-442030	19-296-6204	50	100	25		25	30			60	2	A
J-442106	19-296-6206	50	150	25		25	30			110	2	A
J-442031	19-296-6208	50	200	25		25	40			160	2	A
J-442032	19-296-6304	80	100	20		60	30			60	2	A
J-442033	19-296-6306	80	150	20		60	30			110	2	A
J-442034	19-296-6308	80	200	20		60	40			160	2	A
J-442035	19-296-6310	80	250	20		60	40			210	2	A
J-442036	19-296-6312	80	315	20	40	60	40		250	275	3	B
J-442123	19-296-6402	100	50	22		78		14	27		2	D
J-442124	19-296-6403	100	80	22		78		30	50		2	D
J-442037	19-296-6404	100	100	22		78	30			60	2	A
J-442038	19-296-6406	100	150	22		78	30			110	2	A
J-442039	19-296-6408	100	200	22	50	78	40		135	160	3	B
J-442040	19-296-6410	100	250	22	50	78	40		185	210	3	B
J-442041	19-296-6412	100	315	22	50	78	40		250	275	3	B
J-442125	19-296-6503	125	80	25		100		30	50		2	D
J-442042	19-296-6504	125	100	25		100	30			60	2	A
J-442043	19-296-6506	125	150	25		100	30			110	2	A
J-442044	19-296-6508	125	200	25	62	100	40		135	160	3	B
J-442045	19-296-6510	125	250	25	62	100	40		185	210	3	B
J-442046	19-296-6512	125	315	25		100	40	65	250	275	4	C
J-442047	19-296-6604	160	100	30		130	30			60	2	A
J-442048	19-296-6606	160	150	30		130	30			110	2	A
J-442049	19-296-6608	160	200	30	80	130	40		135	160	3	B
J-442050	19-296-6610	160	250	30		130	40	65	185	210	4	C
J-442051	19-296-6612	160	315	30		130	40	65	250	275	4	C

JOLICO J-B TOOL

PRINTED COPY IS UNCONTROLLED

ALUMINUM BRONZE WEAR PLATES WITH GRAPHITE PLUGS

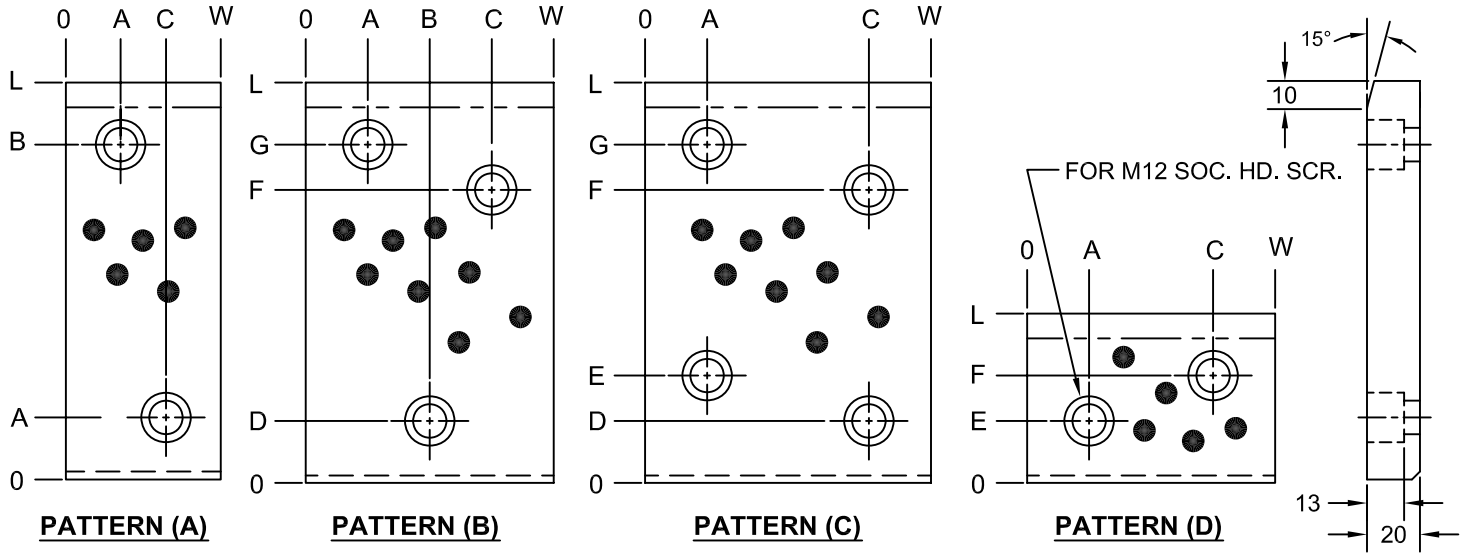

JOLICO NUMBER	CHRYSLER CC NUMBER	WIDTH	LENGTH	A	B	C	D	E	F	G	SCREW HOLE	
											AMT.	PATT.
J-442060	19-296-5204	50	100	25		25	30			60	2	A
J-442107	19-296-5206	50	150	25		25	30			110	2	A
J-442061	19-296-5208	50	200	25		25	40			160	2	A
J-442062	19-296-5304	80	100	20		60	30			60	2	A
J-442063	19-296-5306	80	150	20		60	30			110	2	A
J-442064	19-296-5308	80	200	20		60	40			160	2	A
J-442065	19-296-5310	80	250	20		60	40			210	2	A
J-442066	19-296-5312	80	315	20	40	60	40		250	275	3	B
J-442126	19-296-5402	100	50	22		78		14	27		2	D
J-442127	19-296-5403	100	80	22		78		30	50		2	D
J-442067	19-296-5404	100	100	22		78	30			60	2	A
J-442068	19-296-5406	100	150	22		78	30			110	2	A
J-442069	19-296-5408	100	200	22	50	78	40		135	160	3	B
J-442070	19-296-5410	100	250	22	50	78	40		185	210	3	B
J-442071	19-296-5412	100	315	22	50	78	40		250	275	3	B
J-442128	19-296-5503	125	80	25		100		30	50		2	D
J-442072	19-296-5504	125	100	25		100	30			60	2	A
J-442073	19-296-5506	125	150	25		100	30			110	2	A
J-442074	19-296-5508	125	200	25	62	100	40		135	160	3	B
J-442075	19-296-5510	125	250	25	62	100	40		185	210	3	B
J-442076	19-296-5512	125	315	25		100	40	65	250	275	4	C
J-442077	19-296-5604	160	100	30		130	30			60	2	A
J-442078	19-296-5606	160	150	30		130	30			110	2	A
J-442079	19-296-5608	160	200	30	80	130	40		135	160	3	B
J-442080	19-296-5610	160	250	30		130	40	65	185	210	4	C
J-442081	19-296-5612	160	315	30		130	40	65	250	275	4	C

JOLICO J-B TOOL

PRINTED COPY IS UNCONTROLLED

DIE WEAR PLATES STEEL OR BRONZE (VDI 3357)

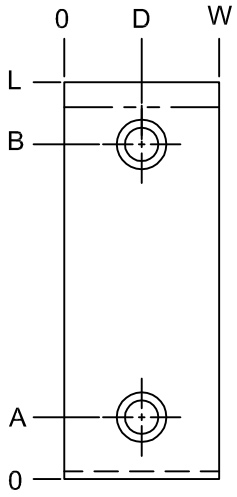

PATTERN (A)

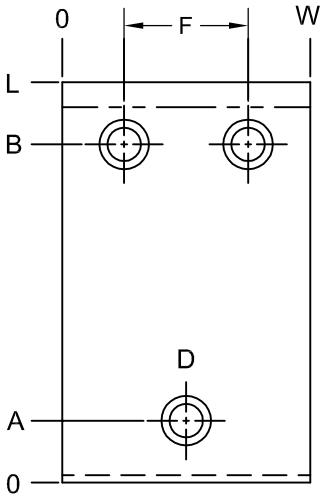

PATTERN (B)

SCREW	T	X H13	YH13
M8 x 25	9	9	15
M12 x 25	13	13.5	20

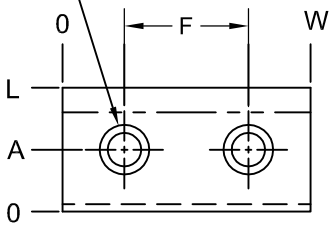

PATTERN (D)

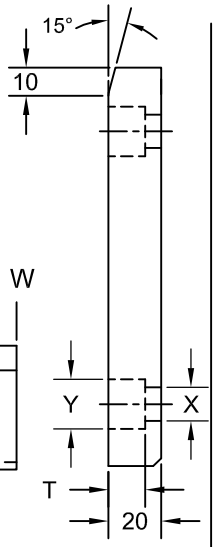

W	L	STEEL WITH NO PLUGS		BRONZE ALLOY WITH PLUGS		A	B	F	D	SHCS	PATT.
		JOLICO NUMBER	CHRYSLER CC NUMBER	JOLICO NUMBER	CHRYSLER CC NUMBER						
50	80	J-810256	19 - 290 - 0070	J-810356	19 - 290 - 0069	25	55		25	M8x25	A
50	100	J-810213	19 - 290 - 4204	J-810313	19 - 290 - 3204	25	75		25	M12x25	A
50	125	J-810214	19 - 290 - 4205	J-810314	19 - 290 - 3205	25	100		25		A
50	160	J-810215	19 - 290 - 4206	J-810315	19 - 290 - 3206	25	135		25		A
50	200	J-810216	19 - 290 - 4208	J-810316	19 - 290 - 3208	25	175		25		A
80	50	J-810272	19 - 290 - 0068	J-810372	19 - 290 - 0067	25		30		M8x25	D
80	80	J-810273	19 - 290 - 0065	J-810373	19 - 290 - 0066	25	55		40	M12x25	A
80	100	J-810217	19 - 290 - 4304	J-810317	19 - 290 - 3304	25	75		40		A
80	125	J-810218	19 - 290 - 4305	J-810318	19 - 290 - 3305	25	100		40		A
80	160	J-810219	19 - 290 - 4306	J-810319	19 - 290 - 3306	25	135		40		A
80	200	J-810220	19 - 290 - 4308	J-810320	19 - 290 - 3308	25	175		40		A
100	50	J-810204	19 - 290 - 4402	J-810304	19 - 290 - 3402	25		50		M12x25	D
100	80	J-810205	19 - 290 - 4403	J-810305	19 - 290 - 3403	40		50			D
100	100	J-810200	19 - 290 - 4404	J-810300	19 - 290 - 3404	25	75		50		A
100	125	J-810201	19 - 290 - 4405	J-810301	19 - 290 - 3405	25	100		50		A
100	160	J-810202	19 - 290 - 4406	J-810302	19 - 290 - 3406	25	135		50		A
100	200	J-810203	19 - 290 - 4408	J-810303	19 - 290 - 3408	25	175		50		A
125	50	J-810274	19 - 290 - 0072	J-810374	19 - 290 - 0071	25		75		M12x25	D
125	80	J-810209	19 - 290 - 4503	J-810309	19 - 290 - 3503	40		75			D
125	100	J-810206	19 - 290 - 4504	J-810306	19 - 290 - 3504	25	75	75	62.5	M12x25	B
125	125	J-810207	19 - 290 - 4505	J-810307	19 - 290 - 3505	25	100	75	62.5		B
125	160	J-810208	19 - 290 - 4506	J-810308	19 - 290 - 3506	25	135	75	62.5		B
125	200	J-810224	19 - 290 - 4508	J-810324	19 - 290 - 3508	25	175	75	62.5		B
160	50	J-810275	19 - 290 - 0076	J-810375	19 - 290 - 0075	25		110		M12x25	D
160	80	J-810276	19 - 290 - 0074	J-810376	19 - 290 - 0073	40		110			D
160	100	J-810210	19 - 290 - 4604	J-810310	19 - 290 - 3604	25	75	110	80	M12x25	B
160	125	J-810211	19 - 290 - 4605	J-810311	19 - 290 - 3605	25	100	110	80		B
160	160	J-810212	19 - 290 - 4606	J-810312	19 - 290 - 3606	25	135	110	80		B
160	200	J-810233	19 - 290 - 4608	J-810333	19 - 290 - 3608	25	175	110	80		B

JOLICO J-B TOOL

PRINTED COPY IS UNCONTROLLED

STOCK GUIDE COMPENSATORS
DOUBLE BEVELED SPOOL

USE WITHOUT LIFTER RACK

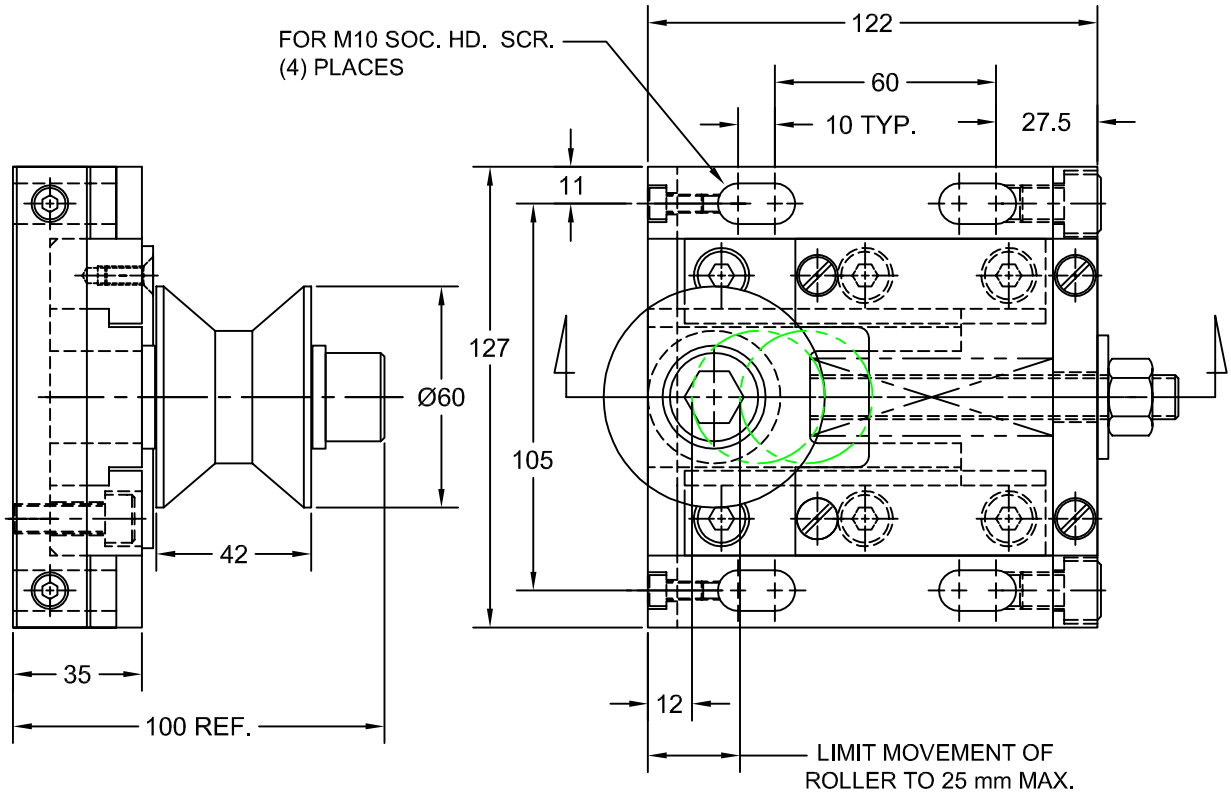

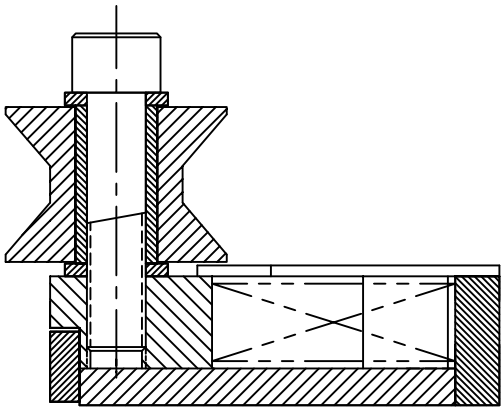

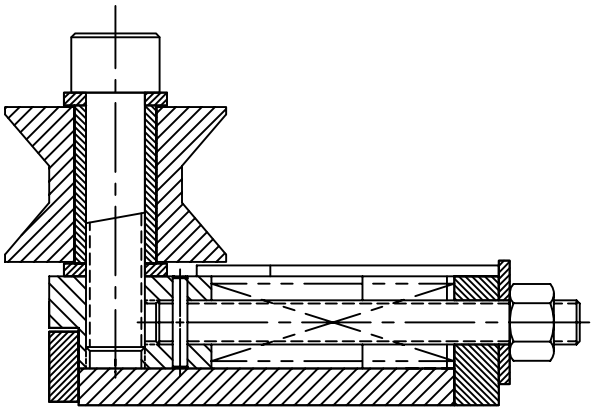

STOCK COMPENSATOR

JOLICO NUMBER	CHRYSLER CC NUMBER
J-886113	19-010-1201

ADJUSTABLE STOCK COMPENSATOR

JOLICO NUMBER	CHRYSLER CC NUMBER
J-886112	19-010-1202

JOLICO J-B TOOL

PRINTED COPY IS UNCONTROLLED

STOCK GUIDE COMPENSATORS
STRAIGHT SPOOL

USE WITH LIFTER RACK

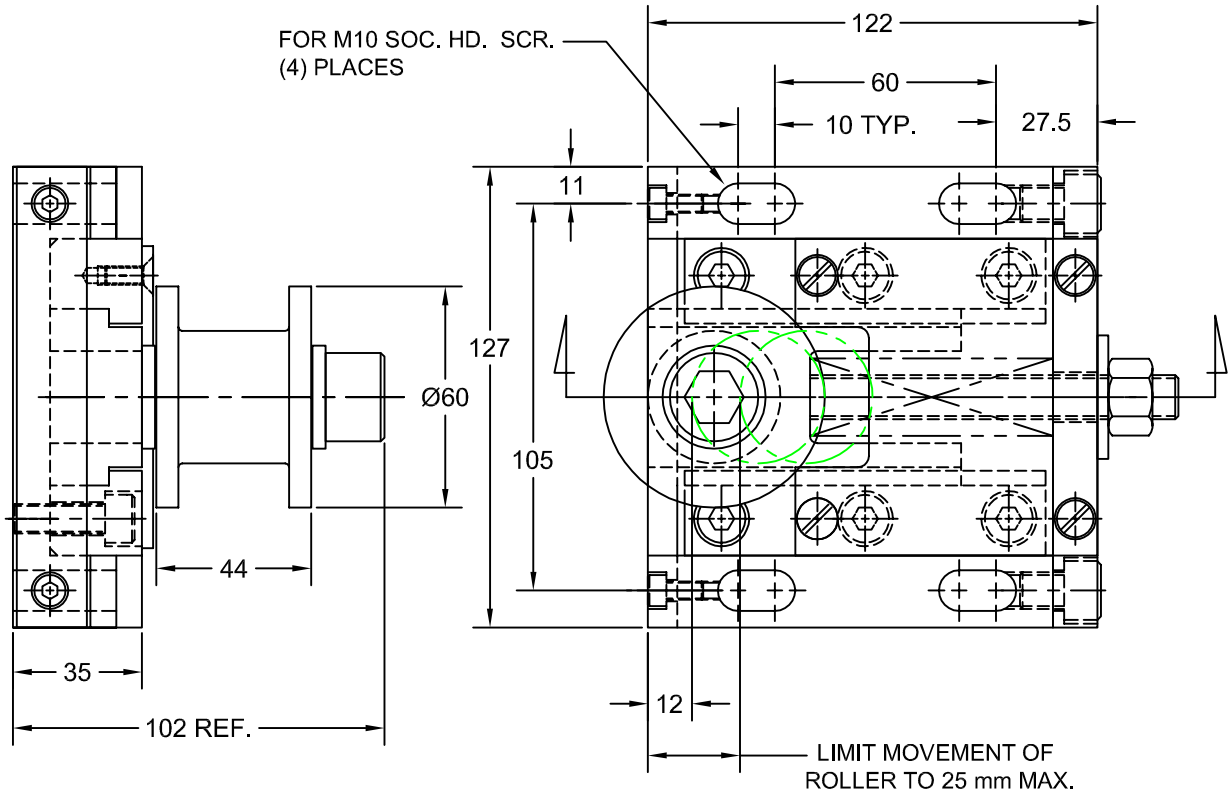

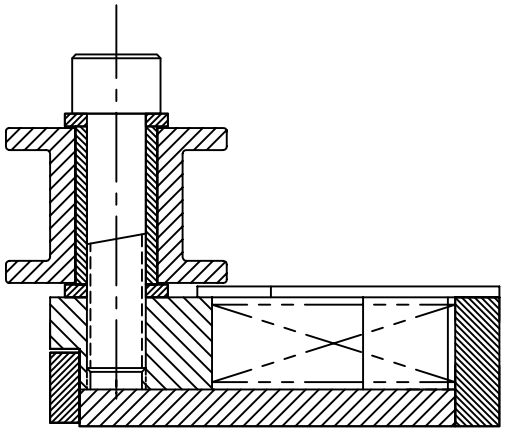

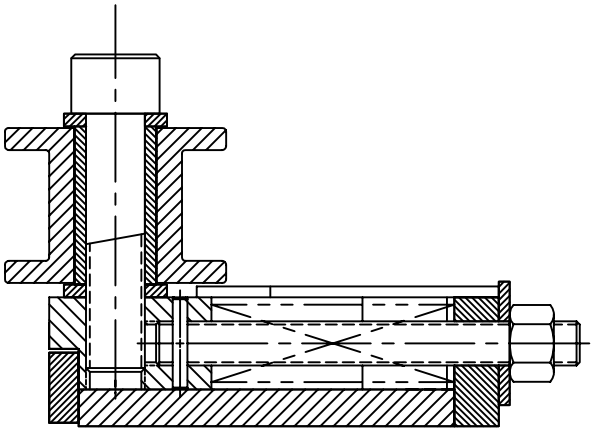

STOCK COMPENSATOR

JOLICO NUMBER	CHRYSLER CC NUMBER
J-886119	19-010-1207

ADJUSTABLE STOCK COMPENSATOR

JOLICO NUMBER	CHRYSLER CC NUMBER
J-886120	19-010-1208

JOLICO J-B TOOL

PRINTED COPY IS UNCONTROLLED

STOCK GUIDE COMPENSATORS
SINGLE BEVEL SPOOL

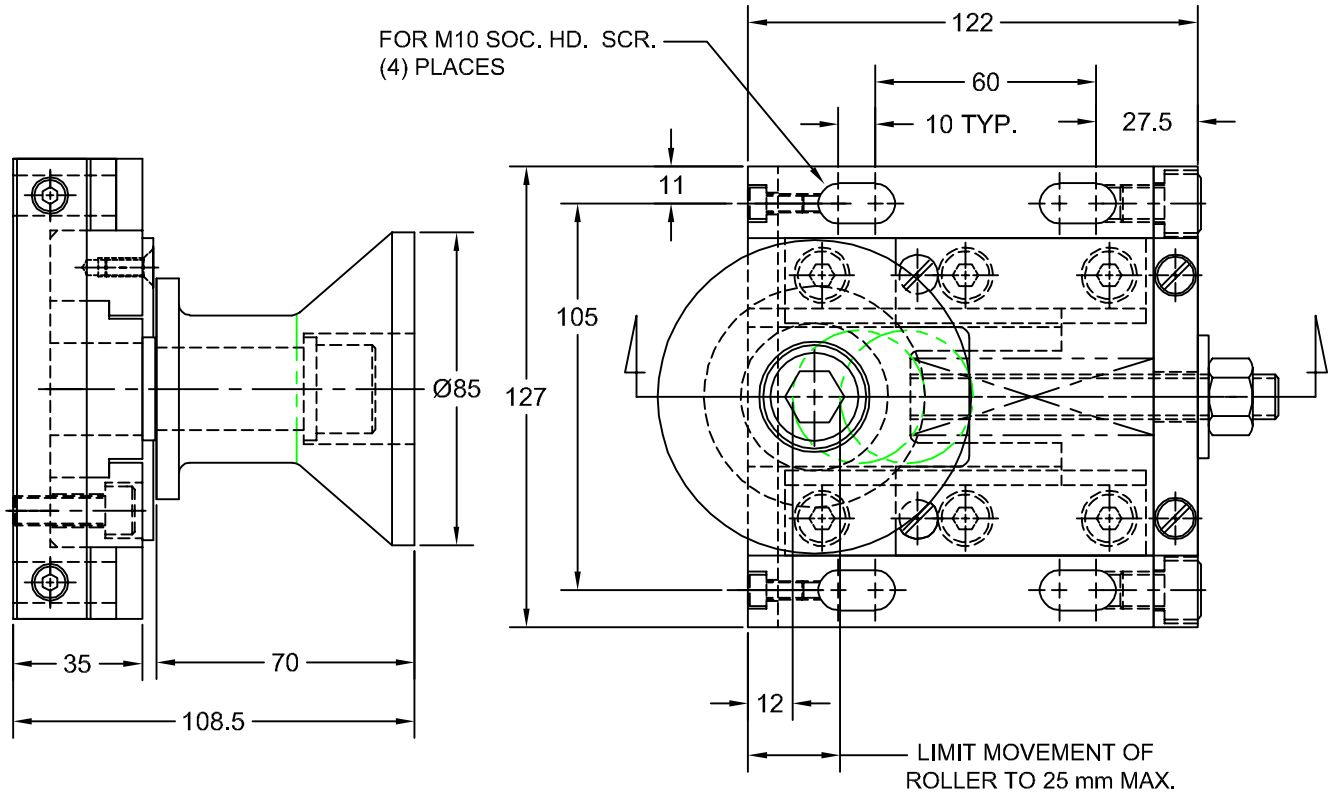

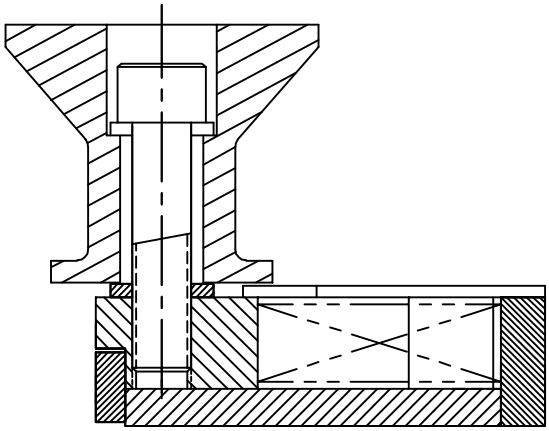

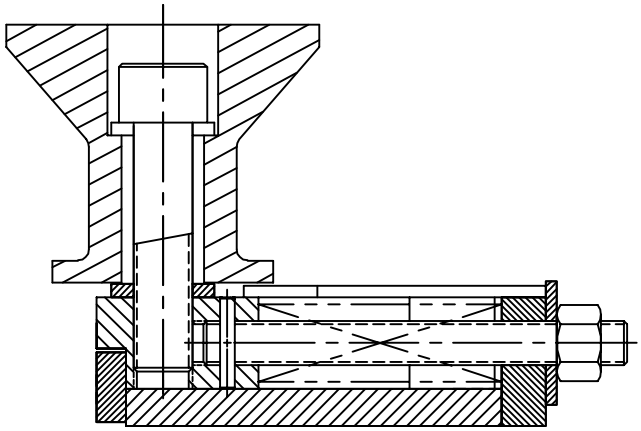

STOCK COMPENSATOR

JOLICO NUMBER	COMMODITY CODE
J-886140	19-010-0077

ADJUSTABLE STOCK COMPENSATOR

JOLICO NUMBER	COMMODITY CODE
J-886141	19-010-0078

JOLICO J-B TOOL

PRINTED COPY IS UNCONTROLLED

STOCK GUIDE SPOOLS

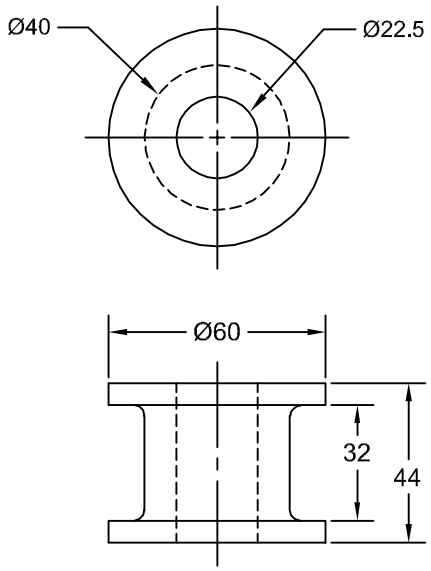

STRAIGHT SPOOL

JOLICO NUMBER	COMMODITY CODE
J-886120-7-RK	19-010-0058

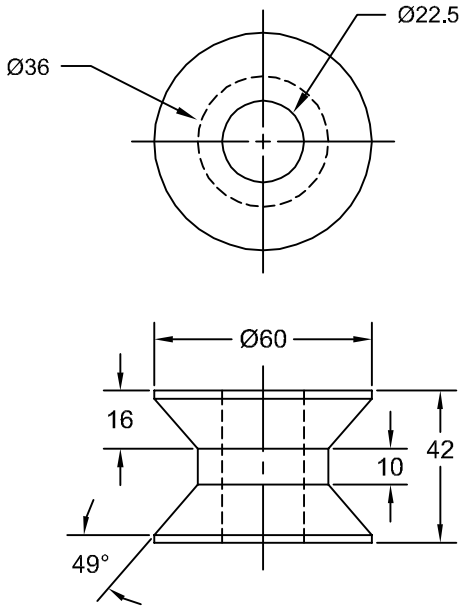

STRAIGHT SPOOL

JOLICO NUMBER	COMMODITY CODE
J-886113-7-RK	19-010-0057

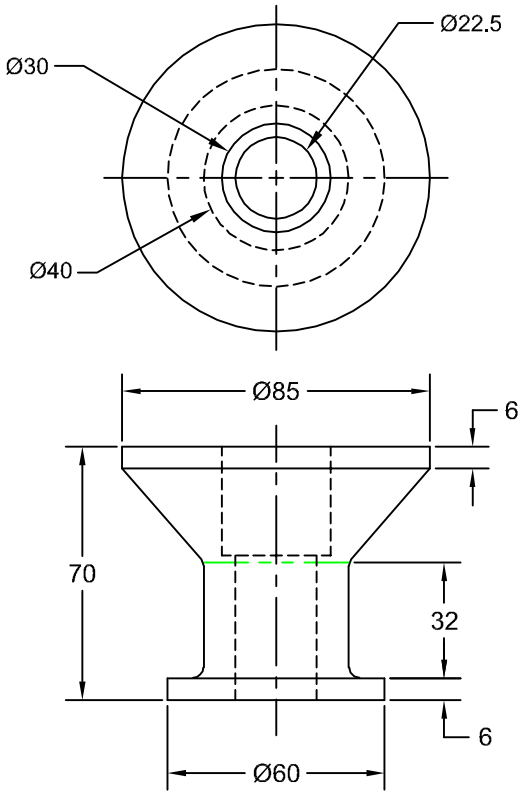

SSP PREFERRED SPOOL

JOLICO NUMBER	COMMODITY CODE
J-886140-7-RK	19-010-0059

JOLICO J-B TOOL

PRINTED COPY IS UNCONTROLLED

ROLLER TYPE STOCK TRANSFER TRACK ASSEMBLY

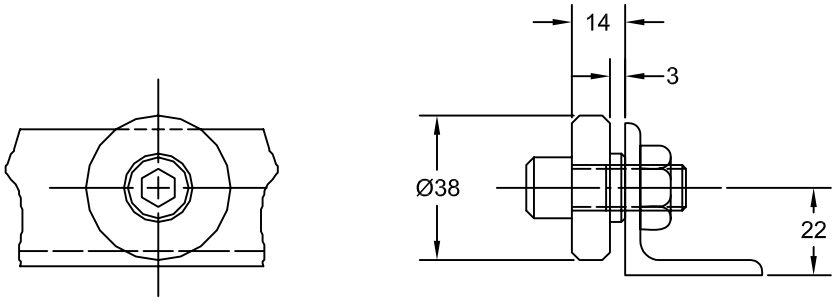

NOTE: ASSEMBLY INCLUDES ROLLER, M12 SELF LOCKING SOC. HD. CAP SCR. HEX NUT AND ANGLE BRACKET.

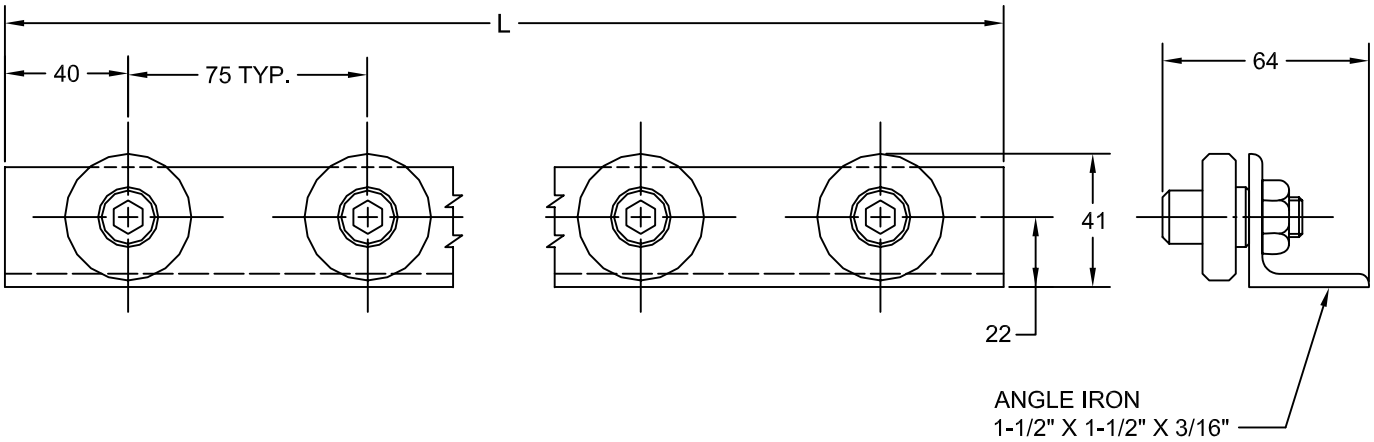

JOLICO NUMBER	CHRYSLER CC NUMBER	L
J-332235-0300	14-532-2203	300
J-332235-0600	14-532-2206	600
J-332235-0900	14-532-2209	900
J-332235-1200	14-532-2212	1200
J-332235-1500	14-532-2215	1500
J-332235-1800	14-523-2218	1800
J-332235-2100	14-532-2221	2100
J-332235-2400	14-532-2224	2400
J-332235-2700	14-532-2227	2700
J-332235-3080	14-532-2230	3048

JOLICO J-B TOOL

PRINTED COPY IS UNCONTROLLED

STOCK LIFTER

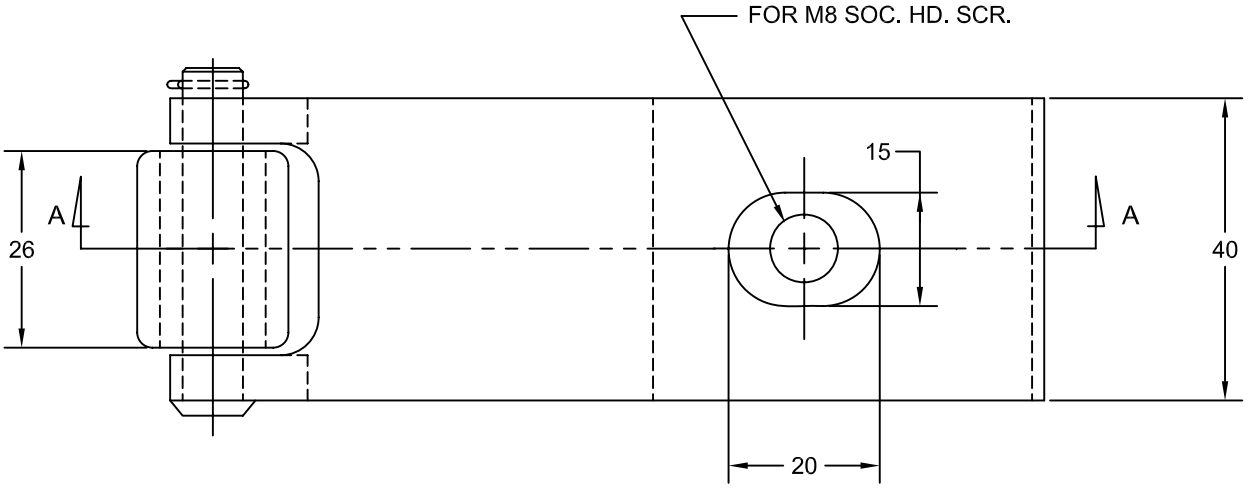

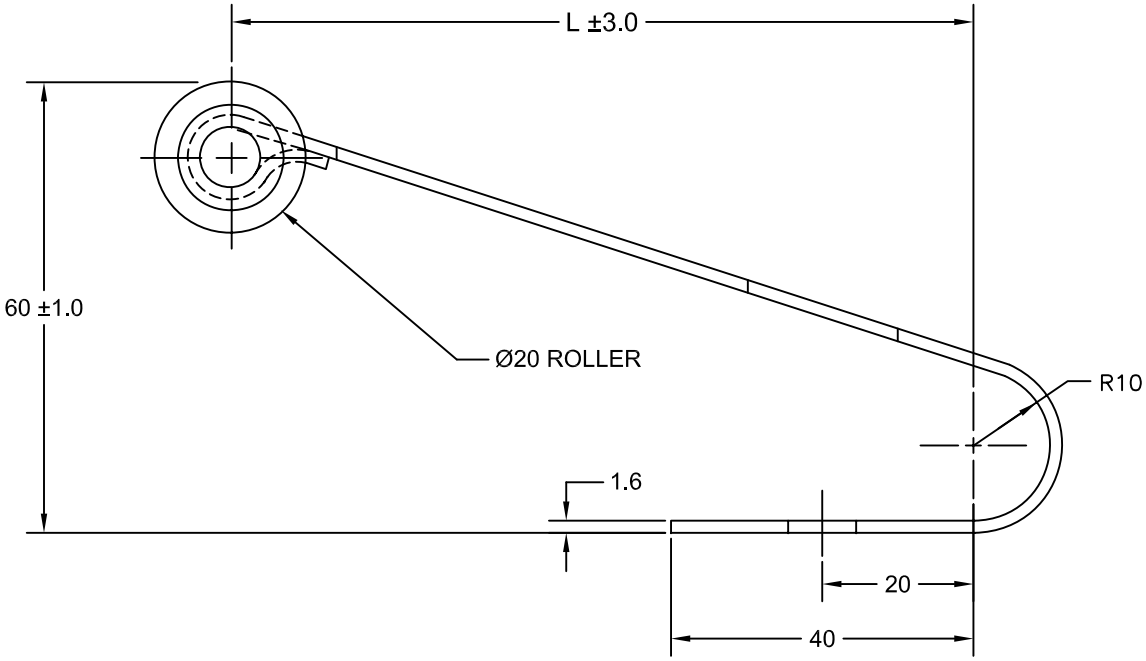

SECTION A-A

JOLICO NUMBER	CHRYSLER CC NUMBER	L	ROLLER
J-112020	19-227-0101	100	NYLON
J-112021	19-227-0102	100	STEEL
J-112022	19-227-0061	60	NYLON
J-112023	19-227-0062	60	STEEL

JOLICO J-B TOOL

PRINTED COPY IS UNCONTROLLED

STOCK LIFTER

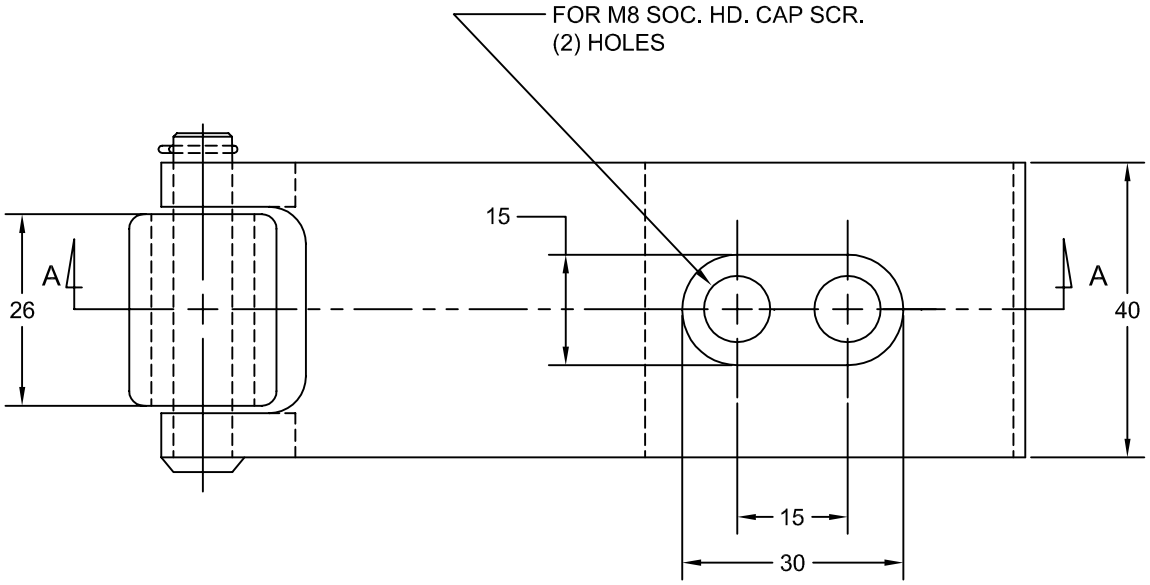

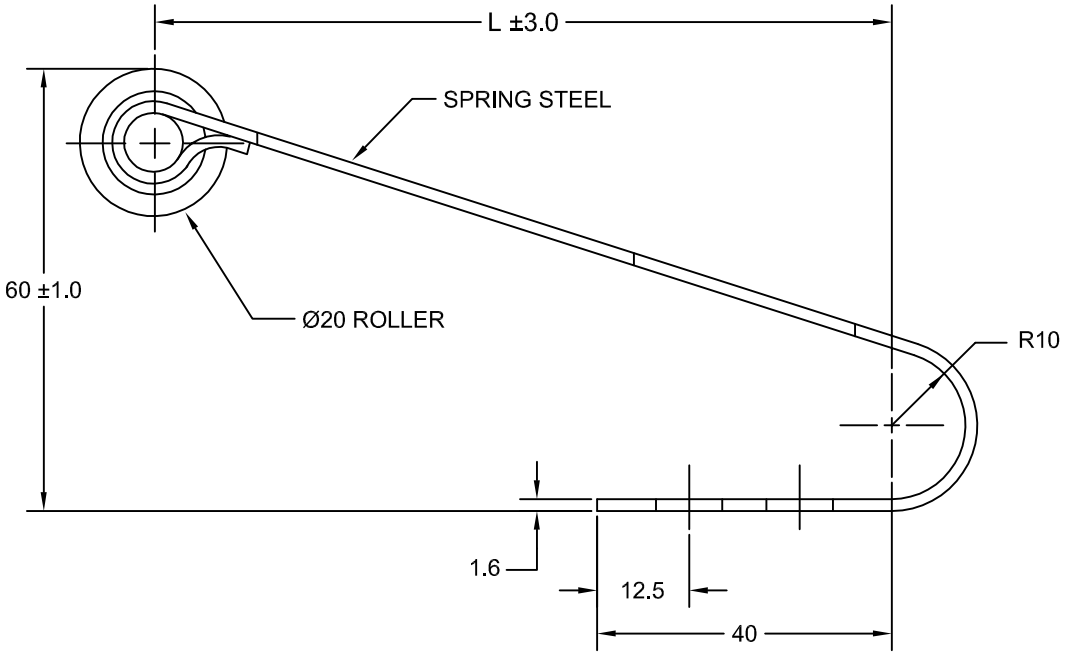

JOLICO NUMBER	CHRYSLER CC NUMBER	L	ROLLERL
J-112024	19-227-0063	60	NYLON
J-112025	19-227-0064	60	STEEL
J-112066	19-227-0066	100	STEEL

JOLICO J-B TOOL

PRINTED COPY IS UNCONTROLLED

STOCK LIFTER

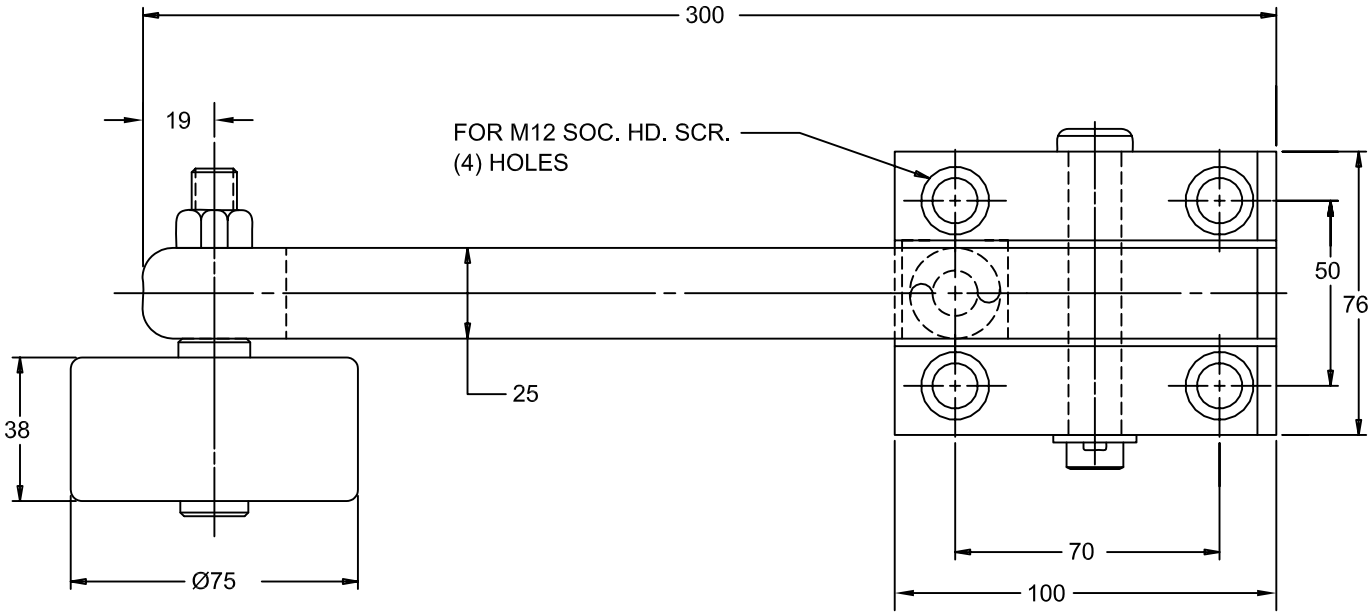

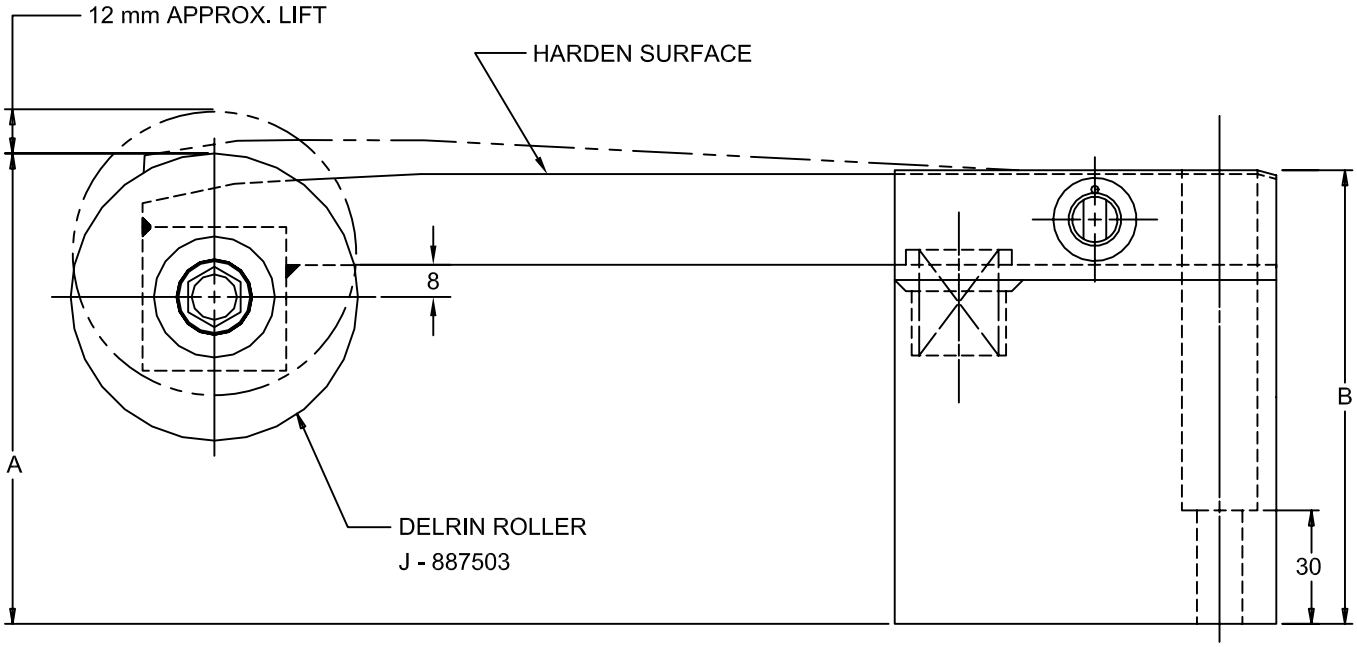

ASSEMBLY WITHOUT ROLLER			
JOLICO NUMBER	CHRYSLER CC NUMBER	A	B
J-552909-N	19-227-2105	100	95
J-552910-N	19-227-2005	125	120

ASSEMBLY WITH ROLLER			
JOLICO NUMBER	CHRYSLER CC NUMBER	A	B
J-552909	19-227-2100	100	95
J-552910	19-227-2000	125	120

JOLICO J-B TOOL

PRINTED COPY IS UNCONTROLLED

LAST BLANK SUPPORT

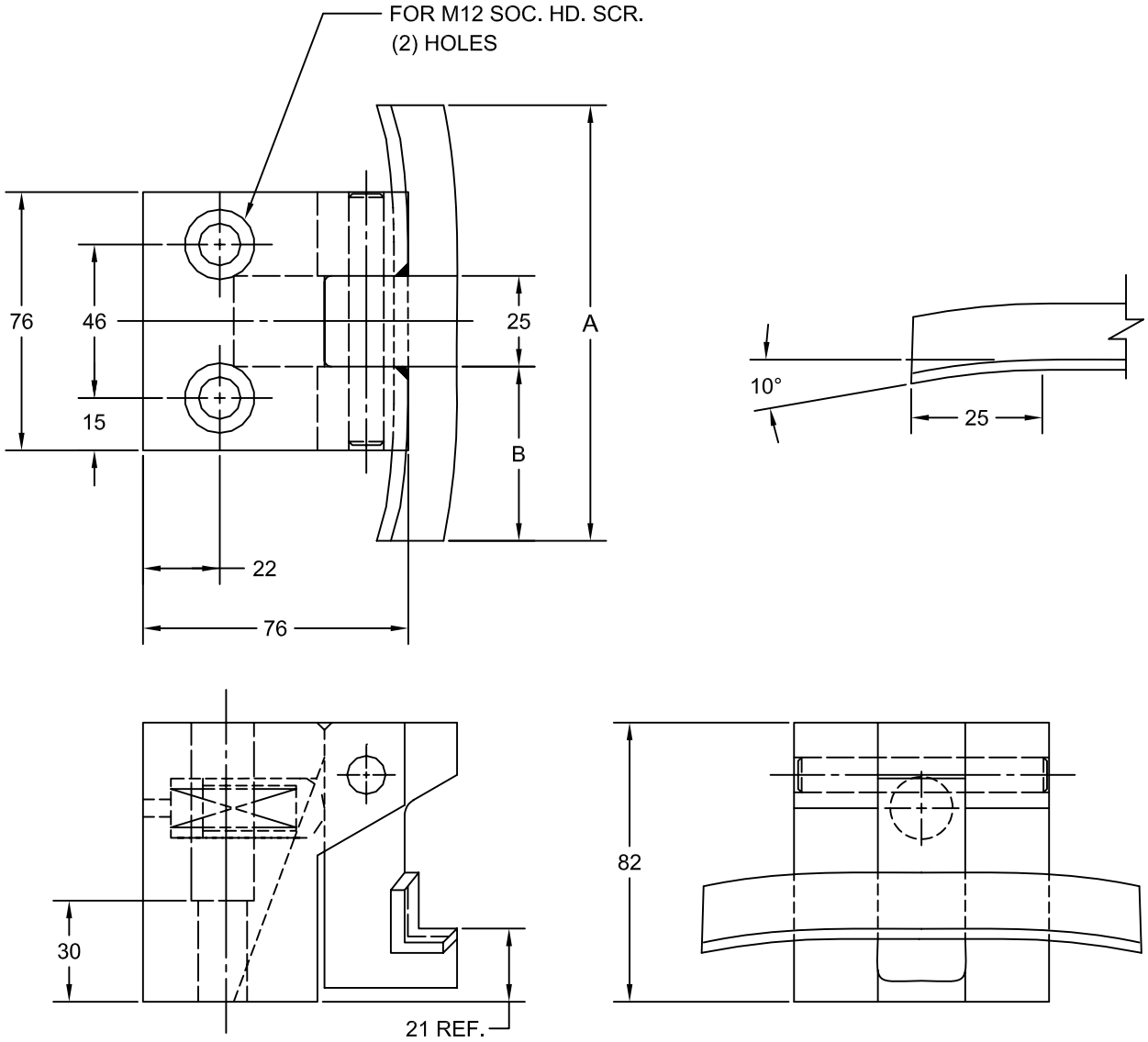

JOLICO NUMBER	CHRYSLER CC NUMBER	A	B
J-559801	19-010-2105	125	50
J-559802	19-010-2110	255	115
J-559803	19-010-2115	381	178

JOLICO J-B TOOL

PRINTED COPY IS UNCONTROLLED

ADJUSTABLE COIL FEED GUIDE ASSEMBLY

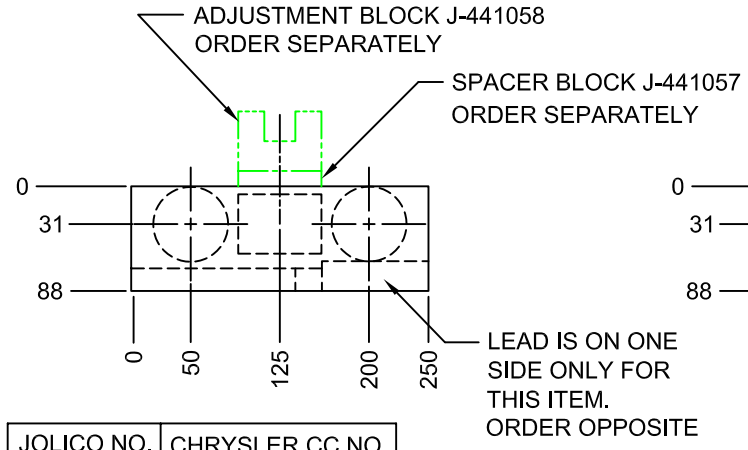

JOLICO NO.	CHRYSLER CC NO.	
J-441050	19-235-1050	SHOWN
J-441049	19-235-1049	OPPOSITE

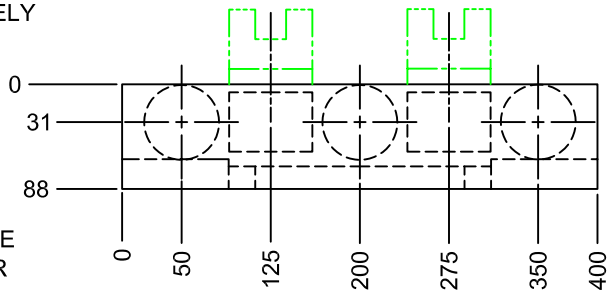

JOLICO NO.	CHRYSLER CC NO.
J-441051	19-235-1051

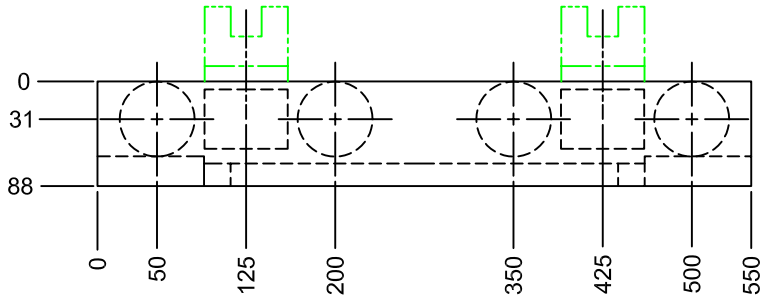

JOLICO NO.	CHRYSLER CC NO.
J-441052	19-235-1052

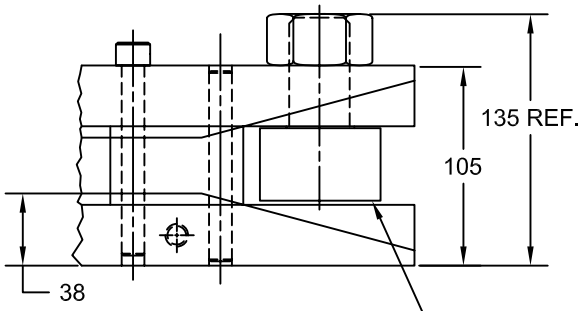

ENLARGED VIEW "X"
TYPICAL BOTH ENDS FOR
J-441051 THRU J-441054

McGILL CAM FOLLOWER

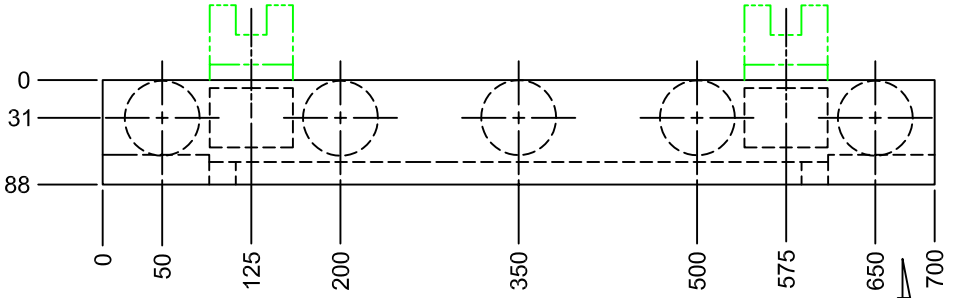

JOLICO NO.	CHRYSLER CC NO.
J-441053	19-235-1053

VIEW "X"

JOLICO J-B TOOL

PRINTED COPY IS UNCONTROLLED

ADJUSTABLE COIL FEED GUIDE ASSEMBLY

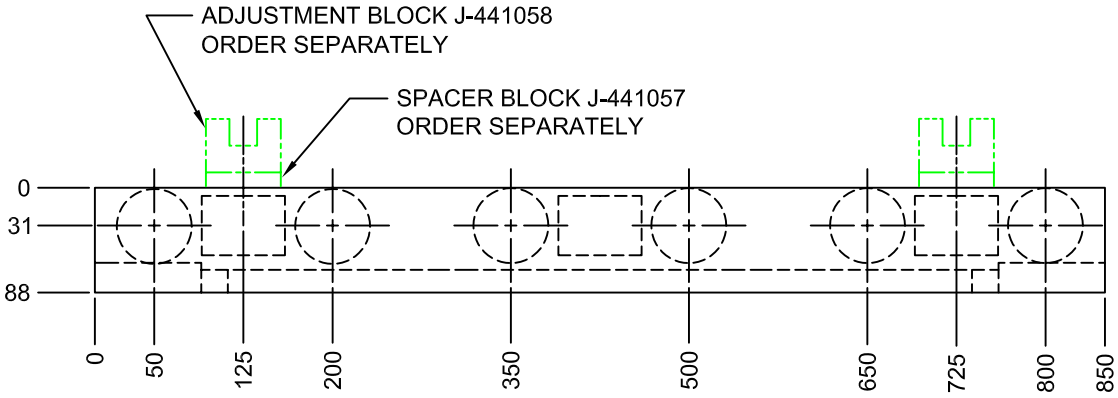

JOLICO NO.	CHRYSLER CC NO.
J-441054	19-235-1054

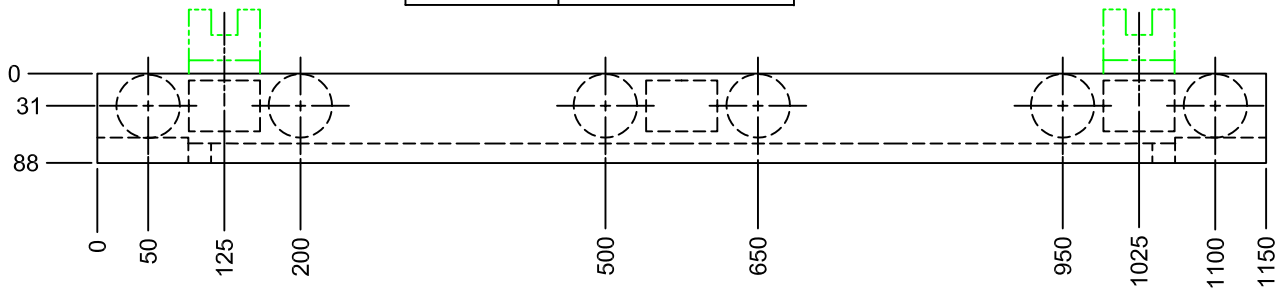

JOLICO NUMBER	CHRYSLER CC NUMBER
J-441055	19-235-1055

VIEW "X"

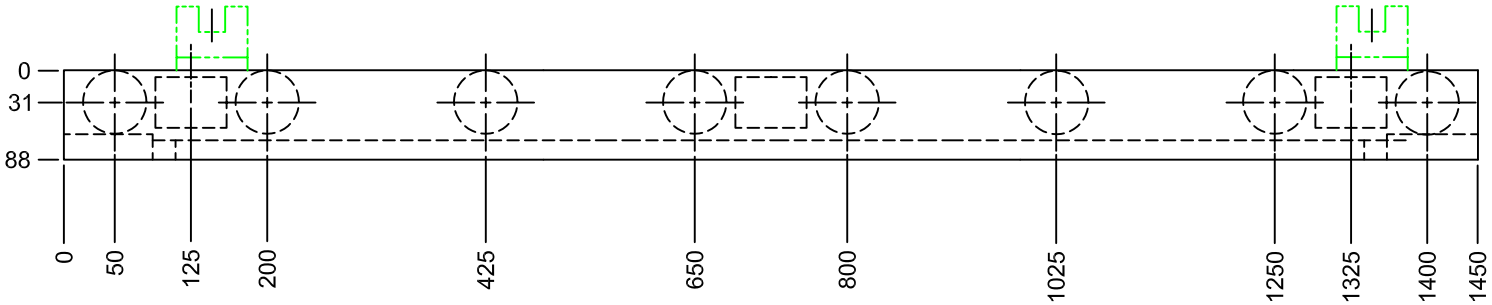

JOLICO NUMBER	CHRYSLER CC NUMBER
J-441056	19-235-1056

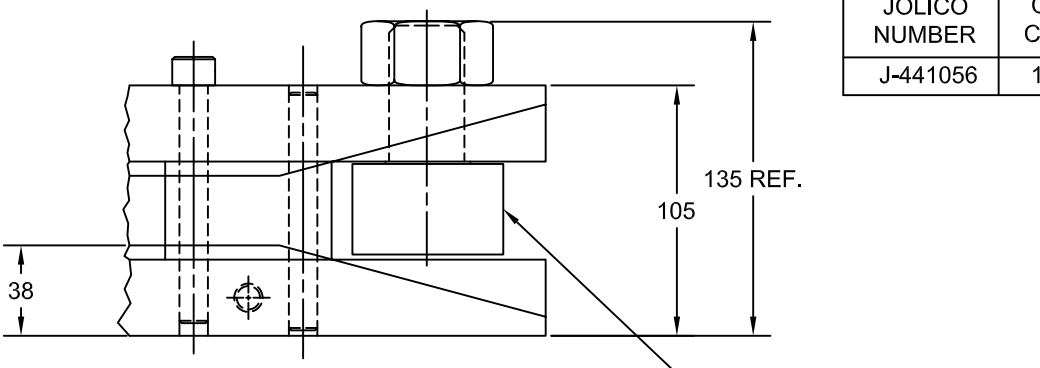

ENLARGED VIEW "X"
TYPICAL BOTH ENDS

JOLICO J-B TOOL

PRINTED COPY IS UNCONTROLLED

SPACER AND ADJUSTMENT BLOCK FOR ADJUSTABLE COIL FEED GUIDE ASSEMBLY

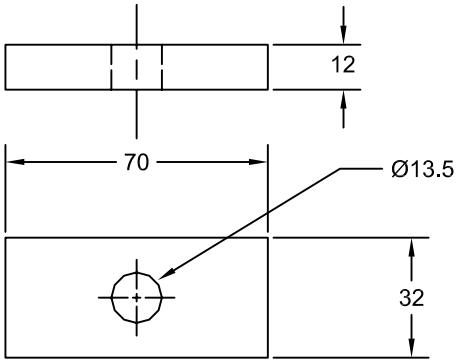

SPACER BLOCK

JOLICO NUMBER	CHRYSLER CC NUMBER
J-441057	19-235-1057

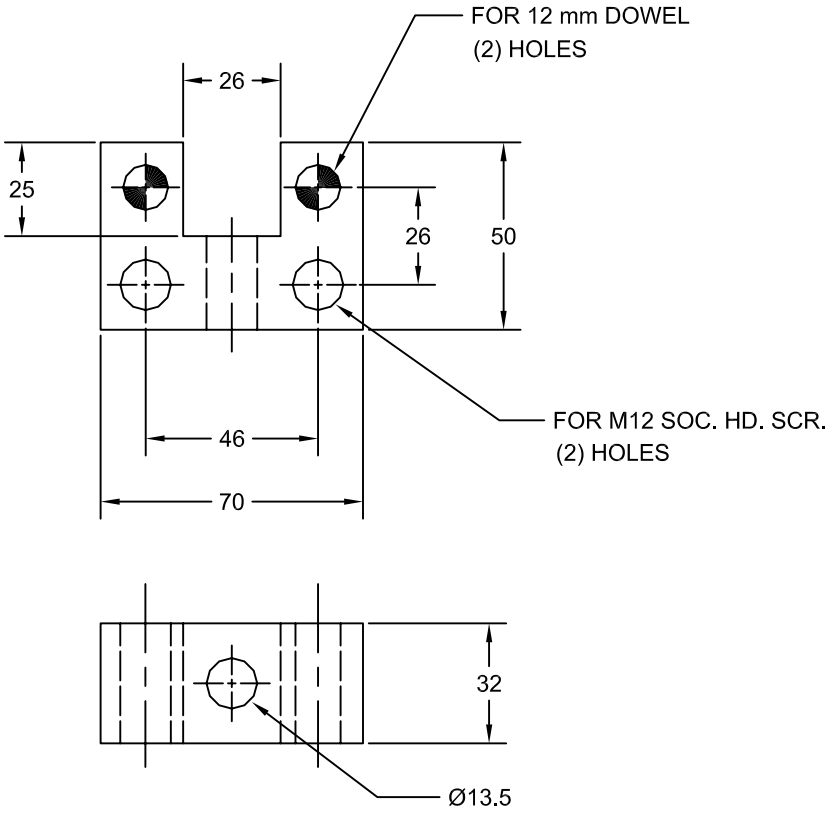

ADJUSTMENT BLOCK

JOLICO NUMBER	CHRYSLER CC NUMBER
J-441058	19-235-1058

JOLICO J-B TOOL

PRINTED COPY IS UNCONTROLLED

NYLON ROLLER AND BALL STOCK TRANSFER

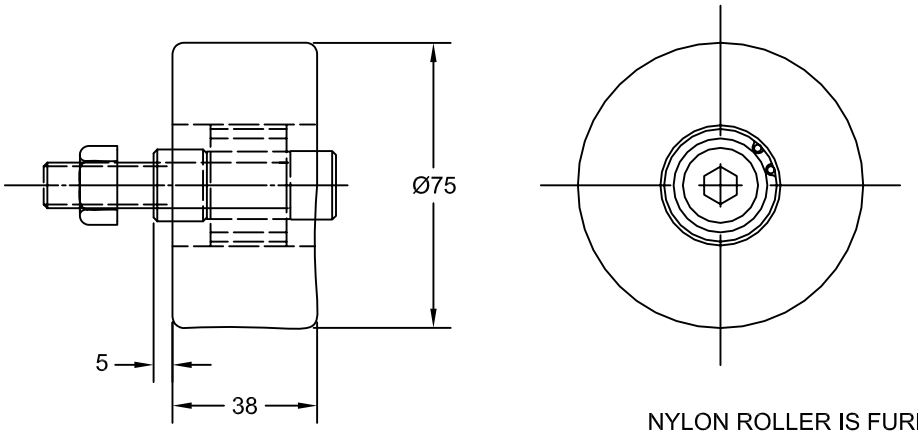

NYLON ROLLER IS FURNISHED WITH M12 X 65 LG. SOC. HD. SCR. M12 HEX NUT AND SPACER

NYLON ROLLERS

JOLICO NUMBER	CHRYSLER CC NUMBER
J-887503	14-533-3307

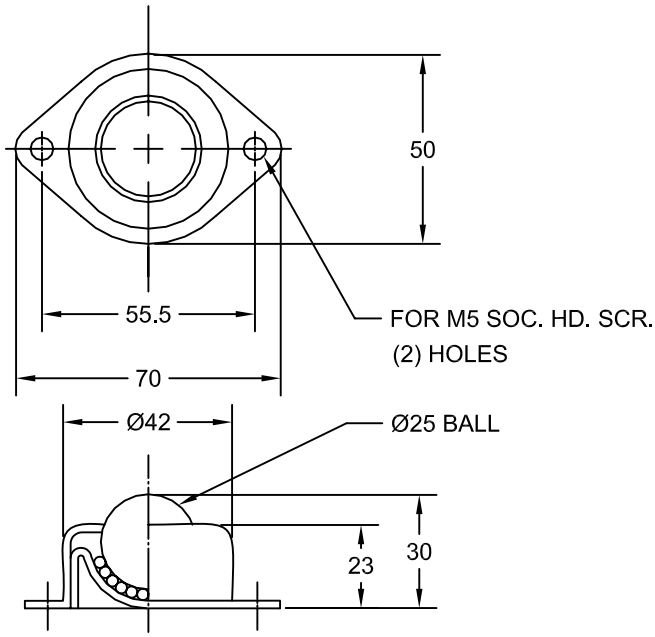

BALL STOCK TRANSFER

JOLICO NUMBER	CHRYSLER CC NUMBER	BALL MATERIAL
J-887201-N	14-530-2001	NYLON
J-887201	14-530-2002	STEEL

JOLICO J-B TOOL

PRINTED COPY IS UNCONTROLLED

FLOW TRACK RAILS SMALL & MEDIUM

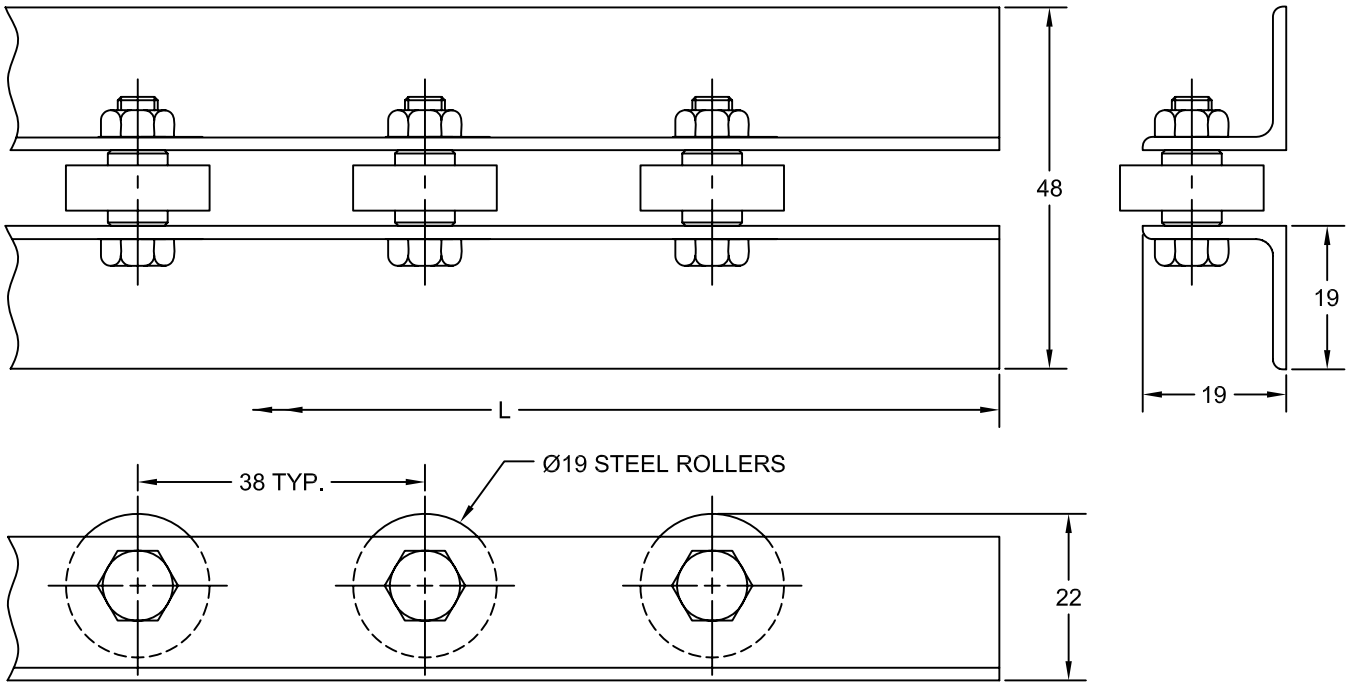

FLOW TRACK RAIL MEDIUM

JOLICO NUMBER	CHRYSLER CC NUMBER	L	
J-332363	14-532-1000	1524	SEE 32315
J-332364	14-532-1500	3048	SEE 32320

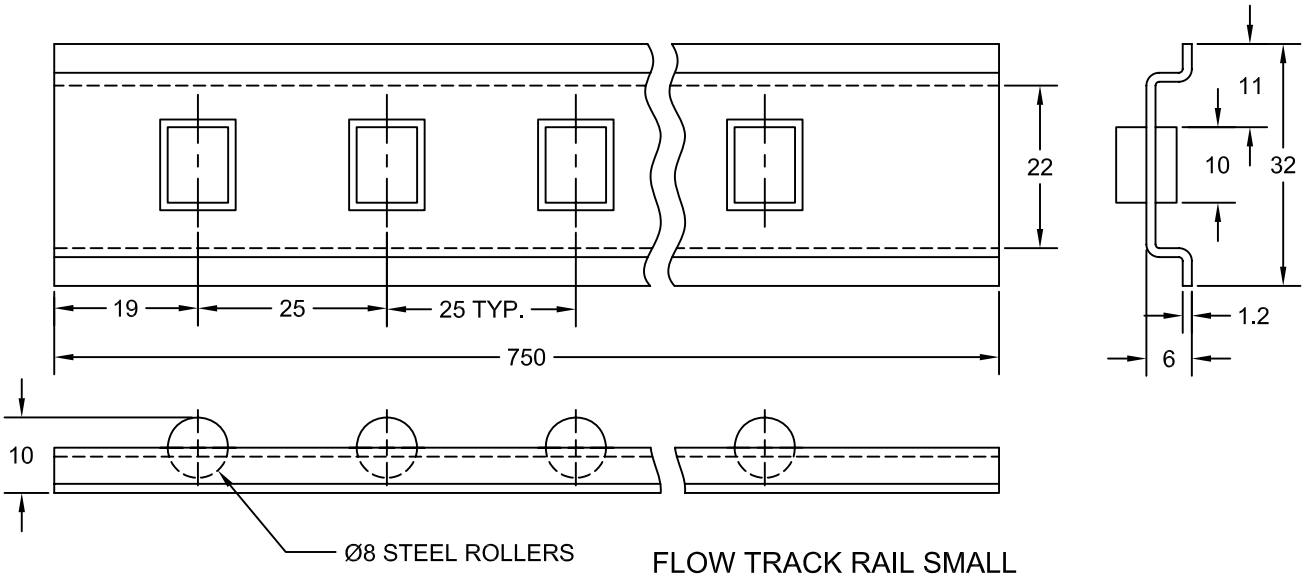

FLOW TRACK RAIL SMALL

JOLICO NUMBER	CHRYSLER CC NUMBER
J-32110	14-532-2000

JOLICO J-B TOOL

PRINTED COPY IS UNCONTROLLED

GUIDE ROLLER SET

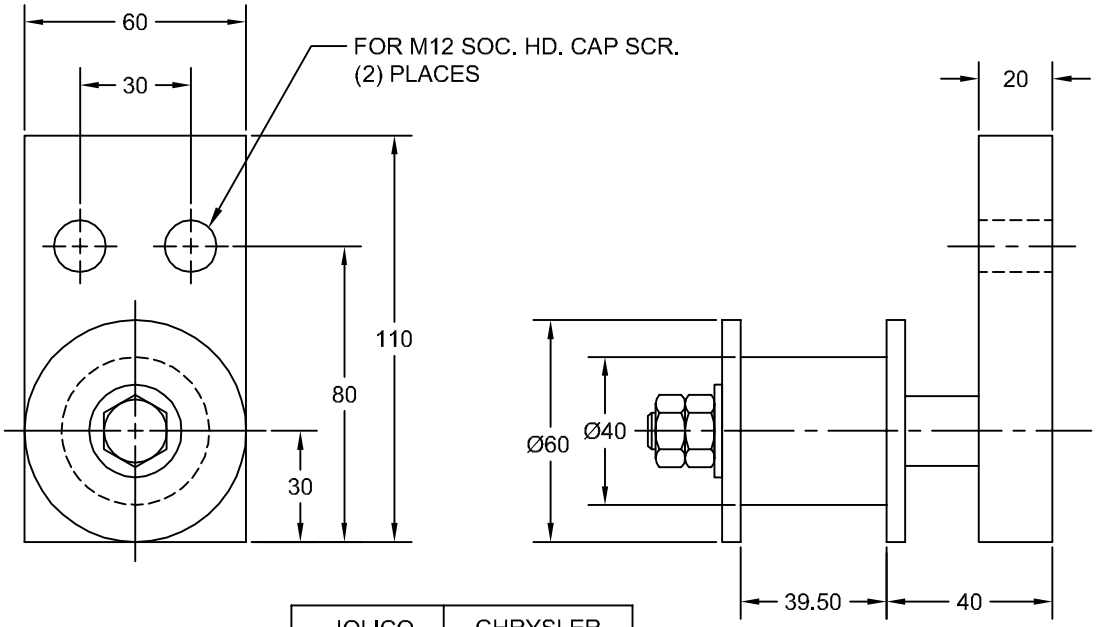

JOLICO NUMBER	CHRYSLER CC NUMBER
J-886127	19-010-1219

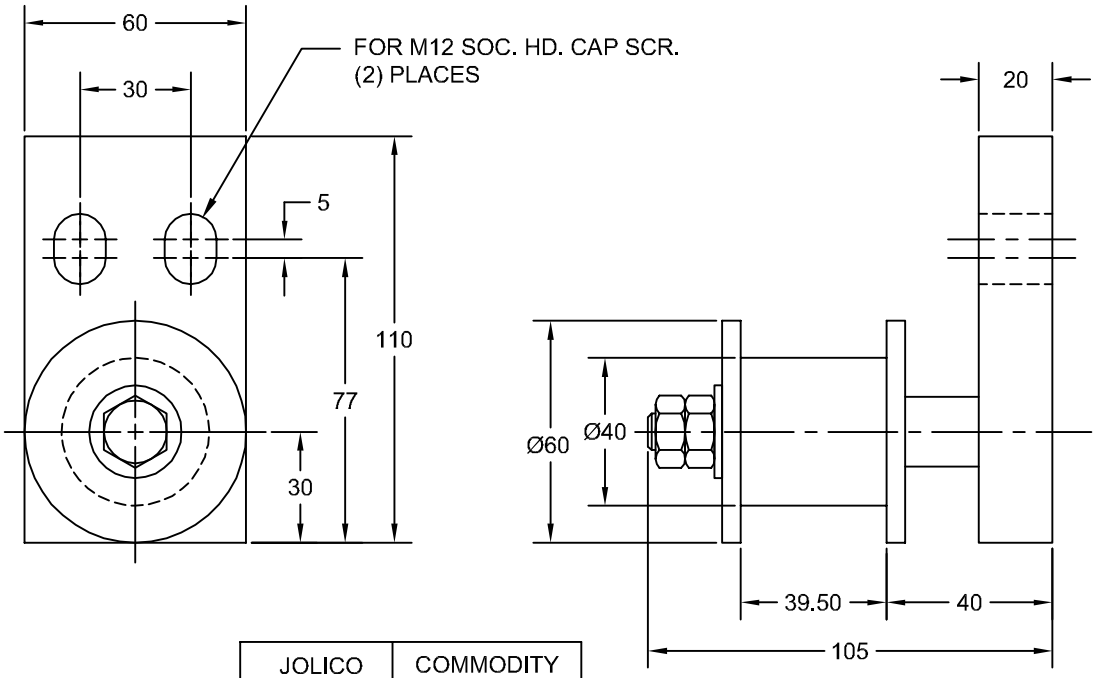

JOLICO NUMBER	COMMODITY CODE
J-886126	19-010-0074

JOLICO J-B TOOL

PRINTED COPY IS UNCONTROLLED

BOTTOMING / BALANCE BLOCK & STOP BLOCK

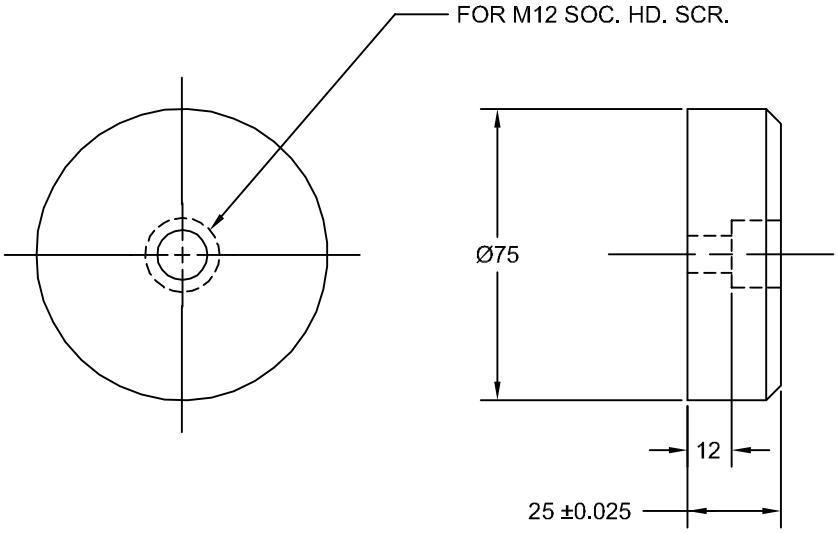

BOTTOMING / BLANCE BLOCK

JOLICO NUMBER	CHRYSLER CC NUMBER
J-228399	19-010-2100

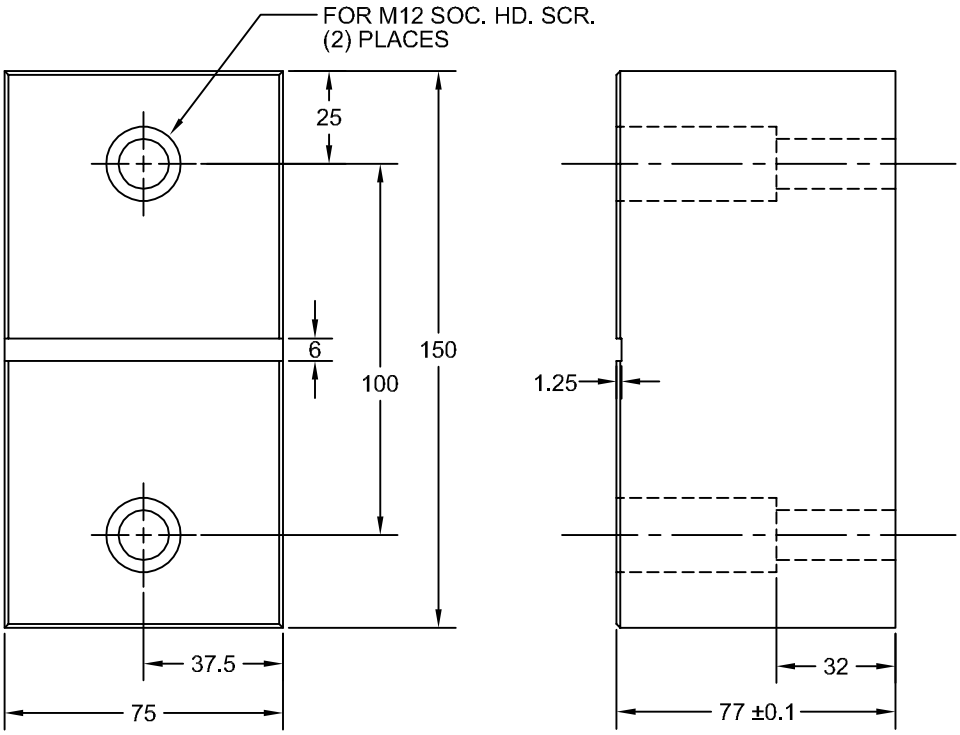

STOP BLOCK

JOLICO NUMBER	CHRYSLER CC NUMBER
J-228250	19-010-0080

JOLICO J-B TOOL

PRINTED COPY IS UNCONTROLLED

STOP BLOCK ROUND

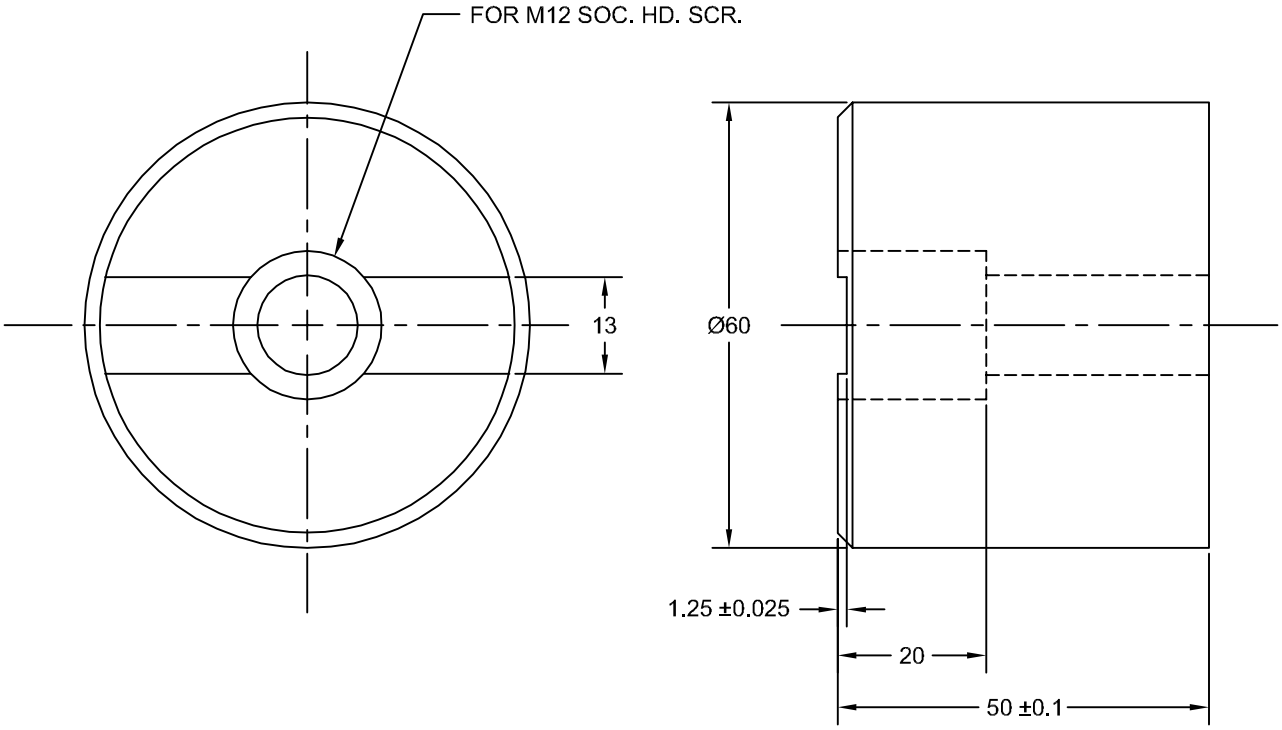

JOLICO NUMBER	CHRYSLER CC NUMBER
J-228427	19-010-0261

JOLICO J-B TOOL

PRINTED COPY IS UNCONTROLLED

BOTTOMING / BALANCE BLOCK

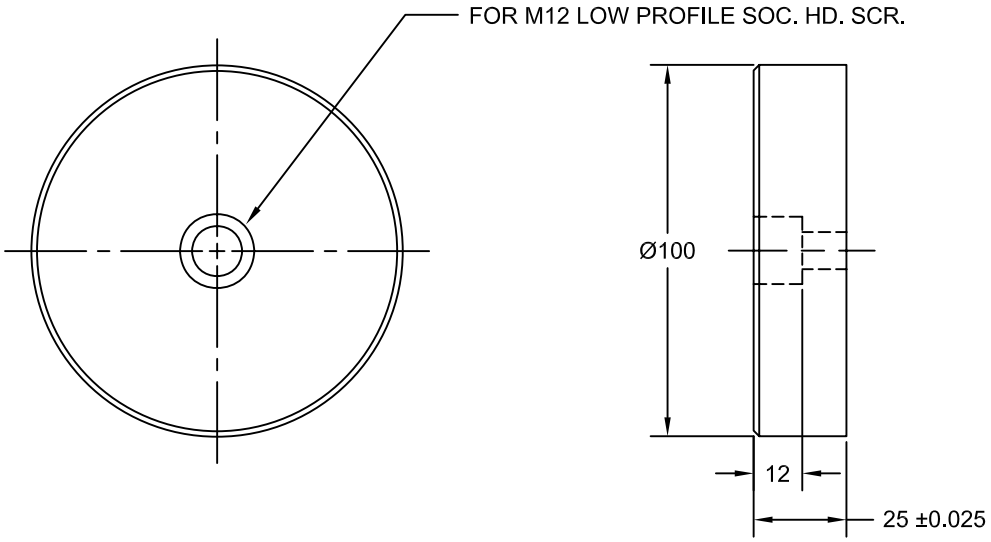

JOLICO NUMBER	CHRYSLER CC NUMBER
J-228412	19-010-0042

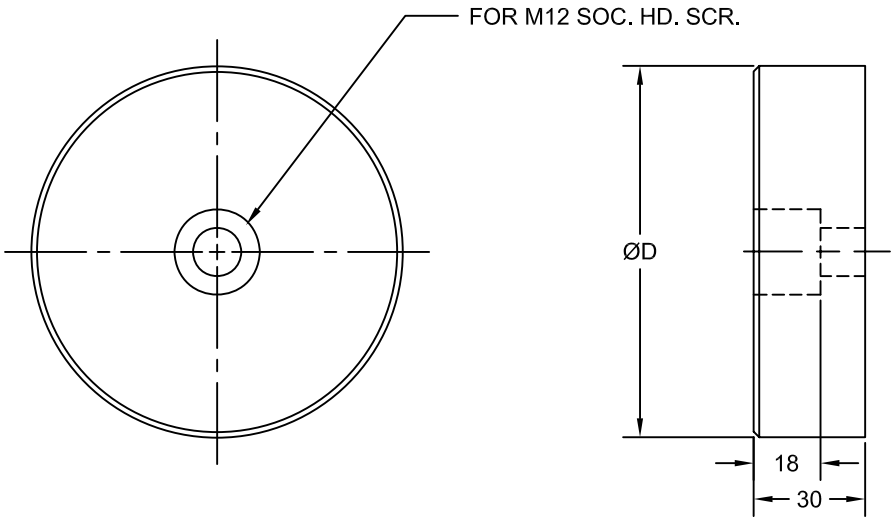

JOLICO NUMBER	CODE NUMBER	CHRYSLER CC NUMBER	ØD
J-449430	TC_080030	19-235-0058	80
J-449431	TC_100030	19-235-0057	100
J-449432	TC_120030	19-235-0054	120

JOLICO J-B TOOL

PRINTED COPY IS UNCONTROLLED

SHIM PLATE
FOR BOTTOMING / BALANCE BLOCK

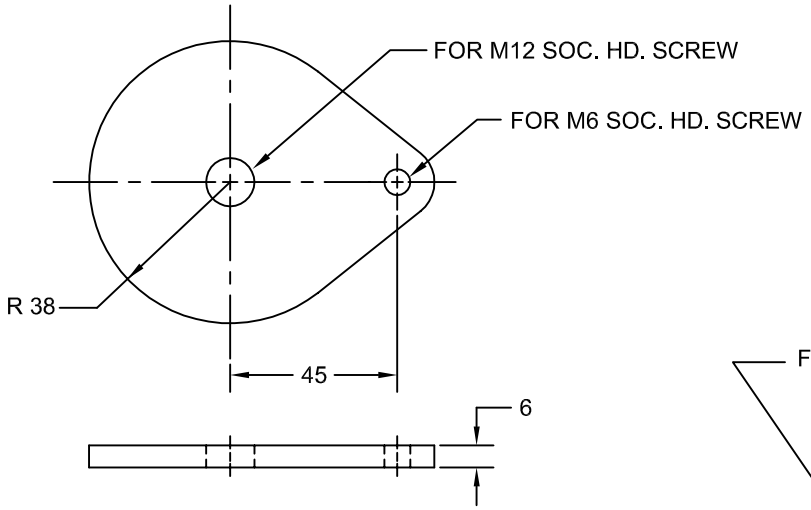

JOLICO NUMBER	CHRYSLER CC NUMBER
J-999980	19-010-0109

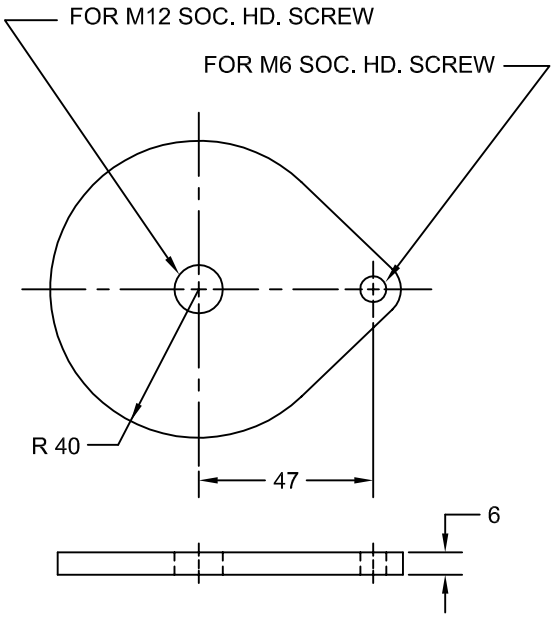

JOLICO NUMBER	CHRYSLER CC NUMBER
J-999982	19-010-0207

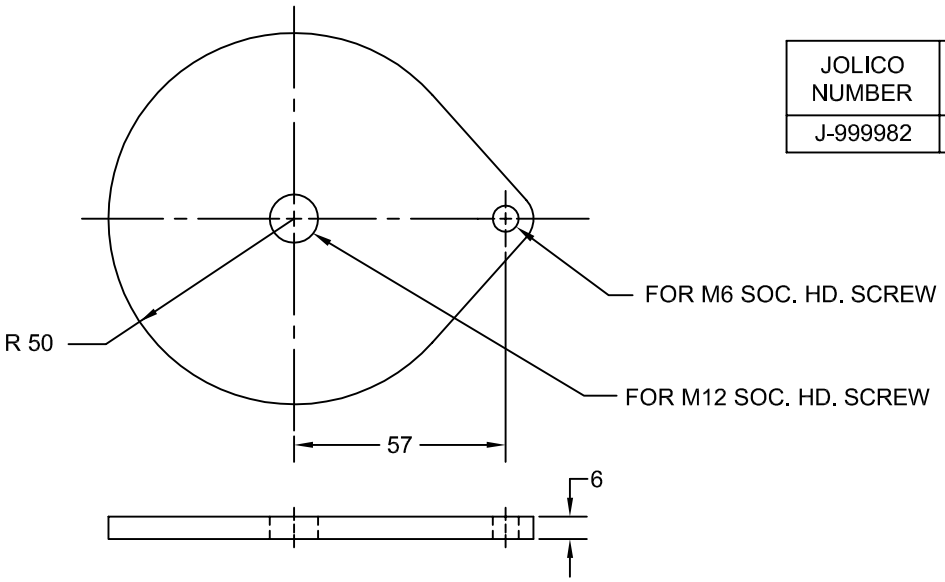

JOLICO NUMBER	CHRYSLER CC NUMBER
J-999981	19-010-0110

JOLICO J-B TOOL

PRINTED COPY IS UNCONTROLLED

AIR VENT TUBES

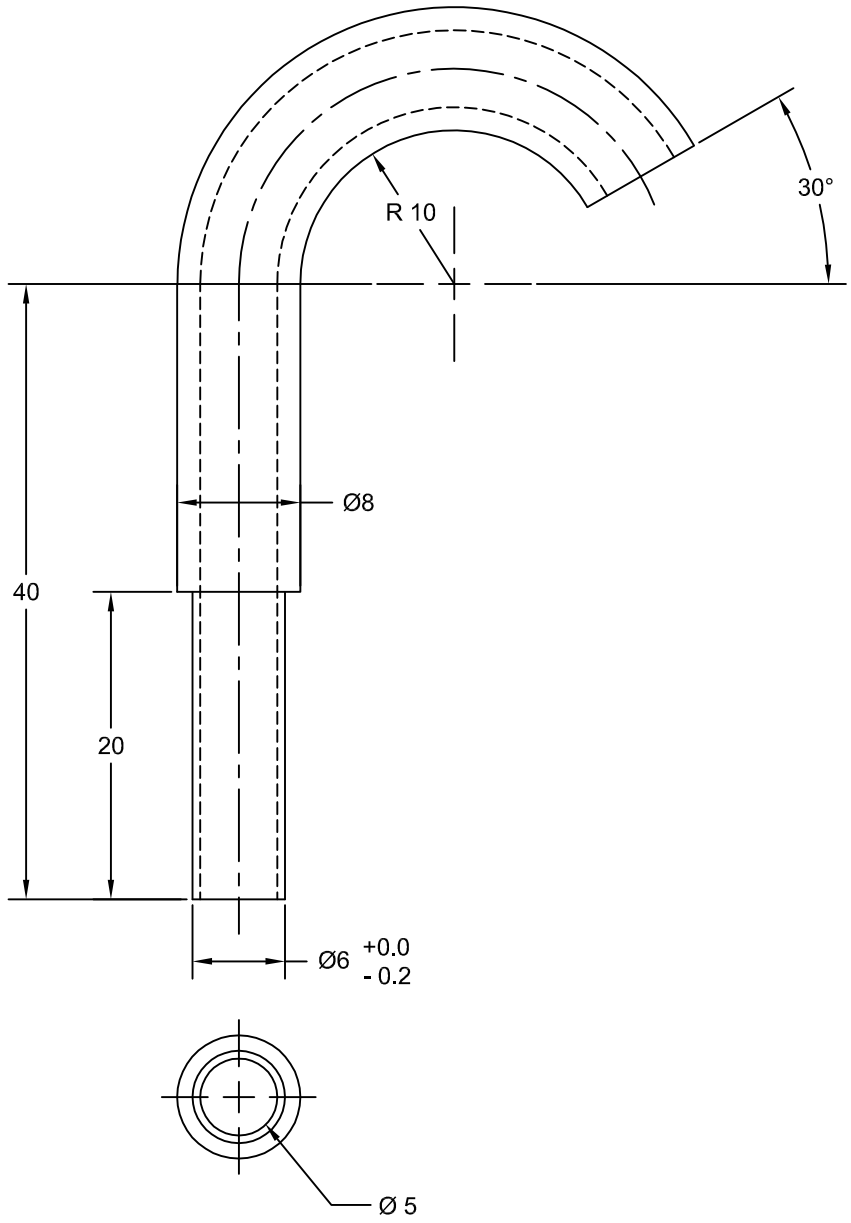

JOLICO NUMBER	CHRYSLER CC NUMBER
J-999913	19-005-0751

JOLICO J-B TOOL

FLANGE STRIPPER

PRINTED COPY IS UNCONTROLLED

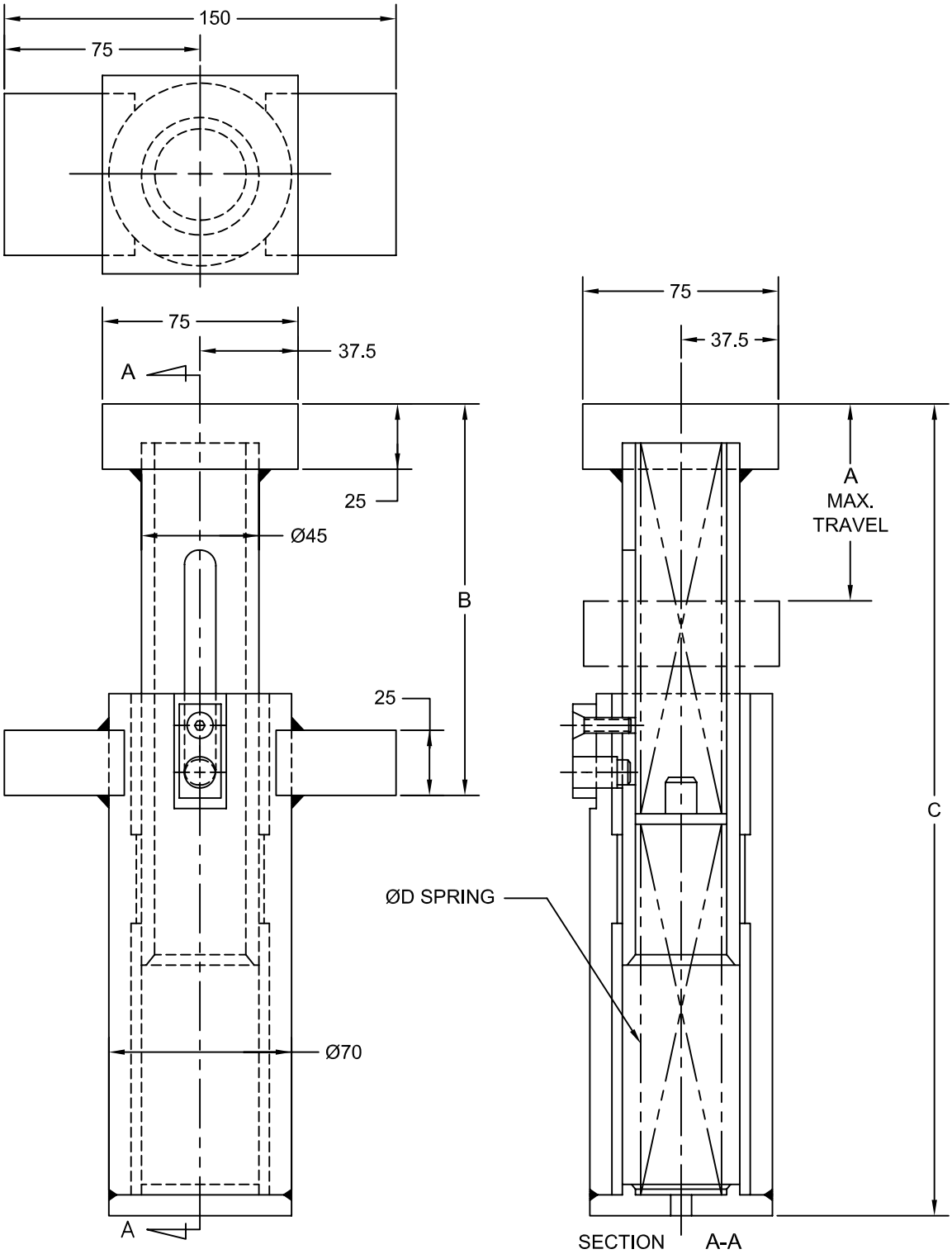

JOLICO NO.	CHRYSLER CC NO.	A	B	C	(D) MEDIUM LOAD SPRING
J-440801	19-010-2008	50	133	222	1 REQ'D. Ø32 X 203 F.L.
J-440802	19-010-2010	63	146	273	1 REQ'D. Ø32 X 254 F.L.
J-440803	19-010-2012	76	159	324	1 REQ'D. Ø32 X 305 F.L.
J-440804	19-010-2014	88	171	375	2 REQ'D. Ø32 X 178 F.L.
J-440805	19-010-2016	100	184	375	2 REQ'D. Ø32 X 178 F.L.
J-440806	19-010-2018	125	216	483	1 REQ'D. Ø32 X 203 F.L. & 1 REQ'D. Ø32 X 254 F. L.
J-440807	19-010-2020	150	241	533	2 REQ'D. Ø32 X 254 F.L.

JOLICO J-B TOOL

PRINTED COPY IS UNCONTROLLED

Ø30 LOCATING CONE AND PIN FOR STRIPPER GAGE

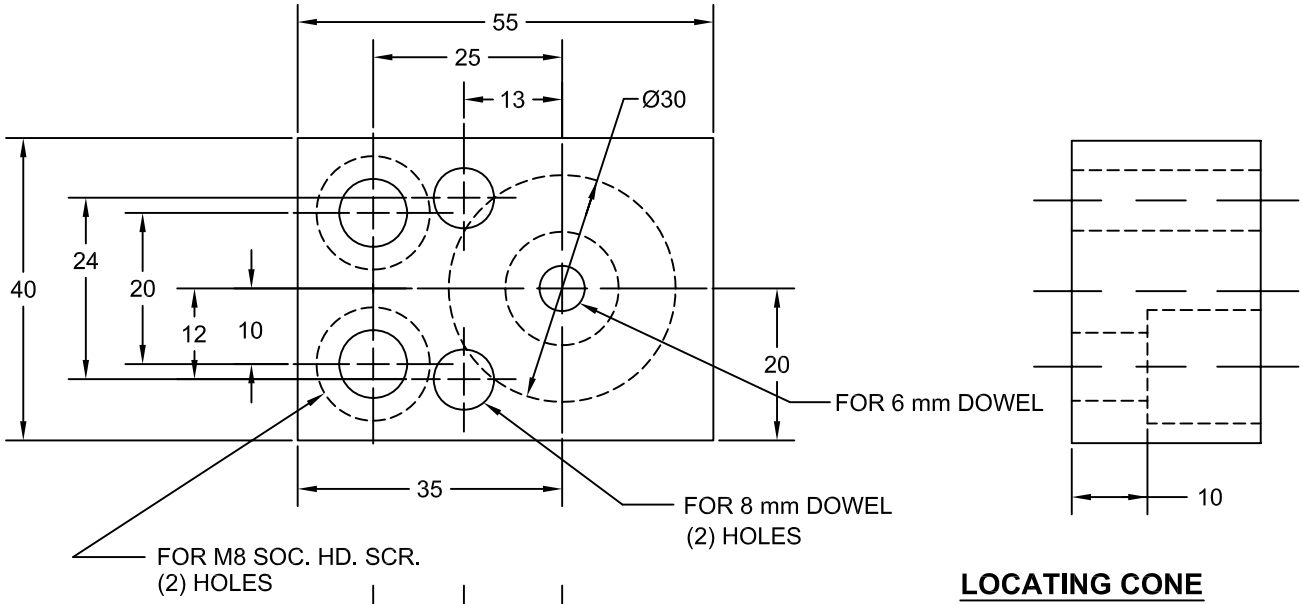

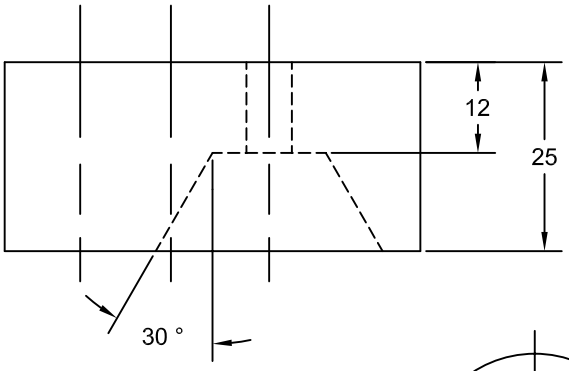

LOCATING CONE

JOLICO NUMBER	CHRYSLER CC NUMBER
J-440793	19-010-2065

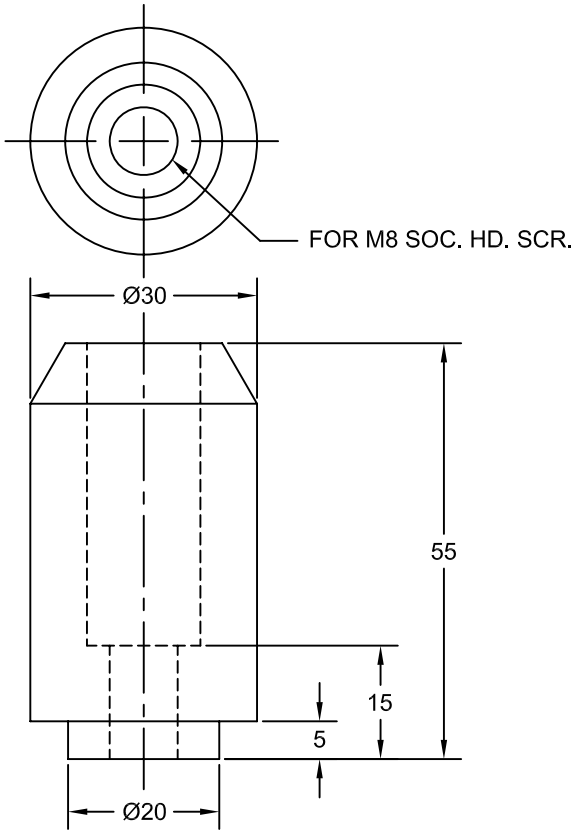

LOCATING CONE PIN

JOLICO NUMBER	CHRYSLER CC NUMBER
J-440792	19-010-2055

JOLICO J-B TOOL

PRINTED COPY IS UNCONTROLLED

Ø50 LOCATING CONE AND PIN FOR STRIPPER GAGE

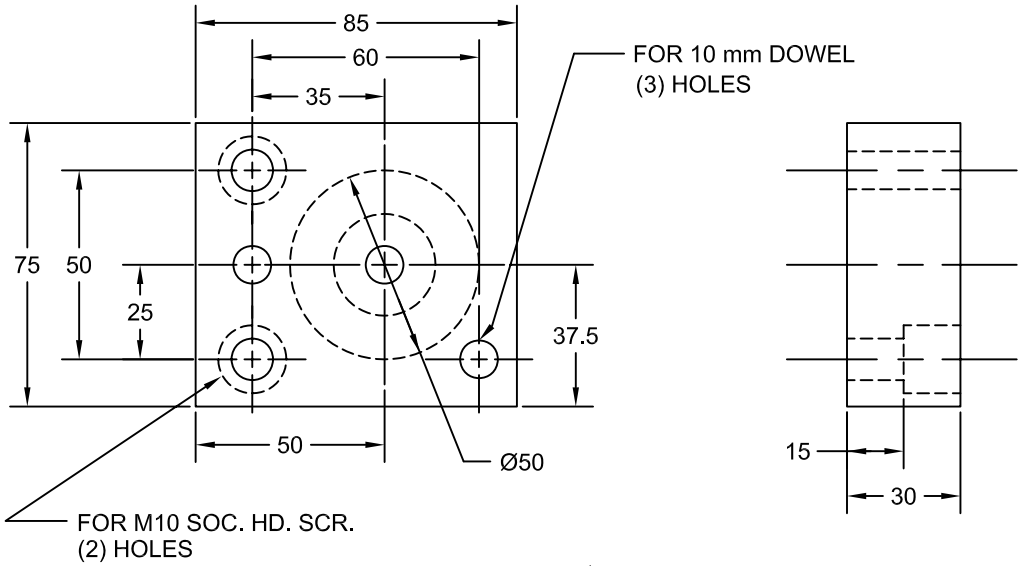

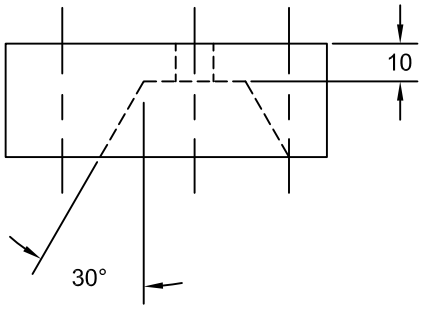

LOCATING CONE

JOLICO NUMBER	CHRYSLER CC NUMBER
J-440791	19-010-2060

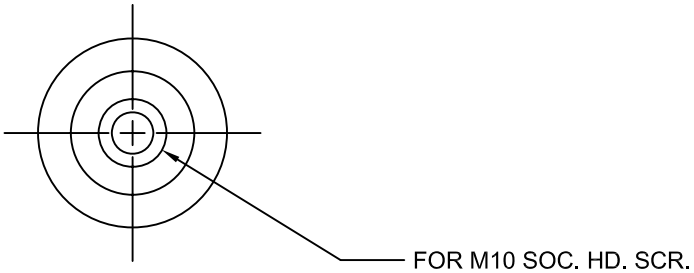

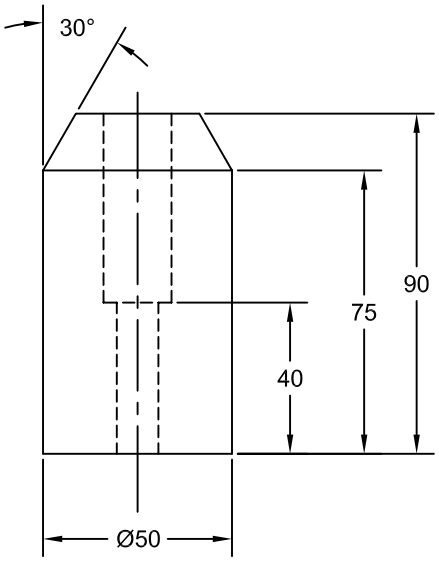

LOCATING CONE PIN

JOLICO NUMBER	CHRYSLER CC NUMBER
J-440790	19-010-2050

JOLICO J-B TOOL

PRINTED COPY IS UNCONTROLLED

Ø50 LOCATING CONE ASSEMBLY

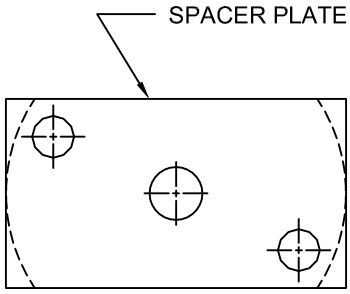

JOLICO NUMBER	CHRYSLER CC NUMBER	DETAIL NAME
J-440797-M	19-010-2071	CONE
J-440797-F	19-010-2072	RECEIVER
J-440797-P	19-010-2073	SPACER PLATE

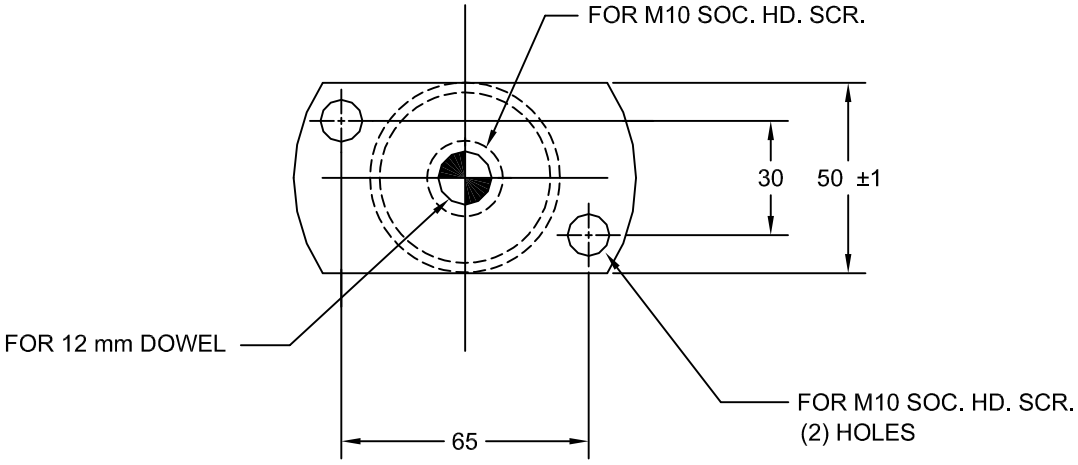

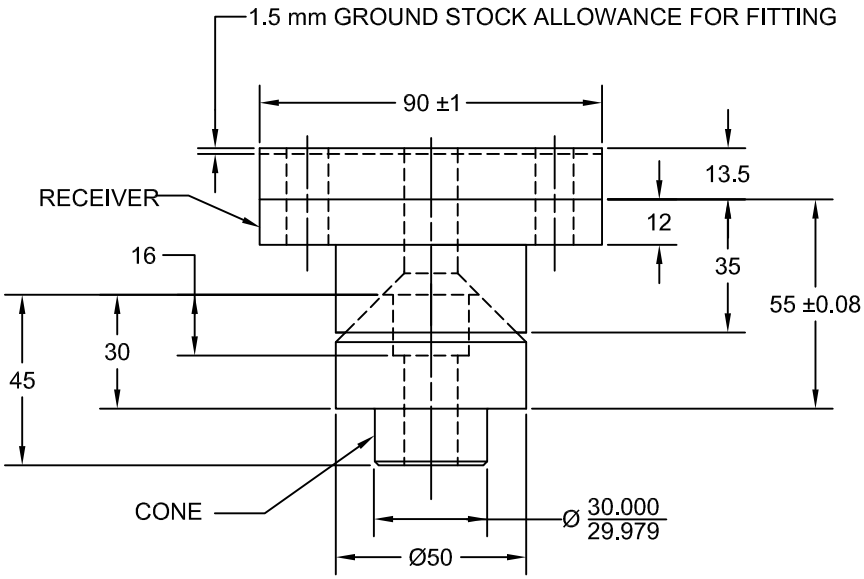

LOCATING CONE ASSEMBLY

JOLICO NUMBER	CHRYSLER CC NUMBER
J-440797	19-010-2070

LOCATING CONE ASSEMBLY IS FURNISHED WITH RECEIVER, CONE AND SPACER PLATE

JOLICO J-B TOOL

PRINTED COPY IS UNCONTROLLED

CONE BALANCER BLOCK

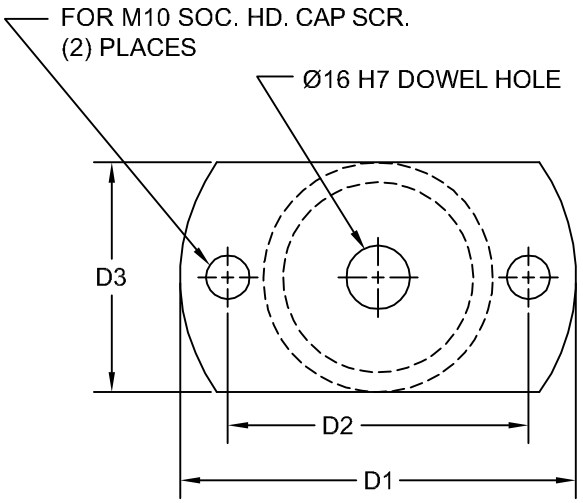

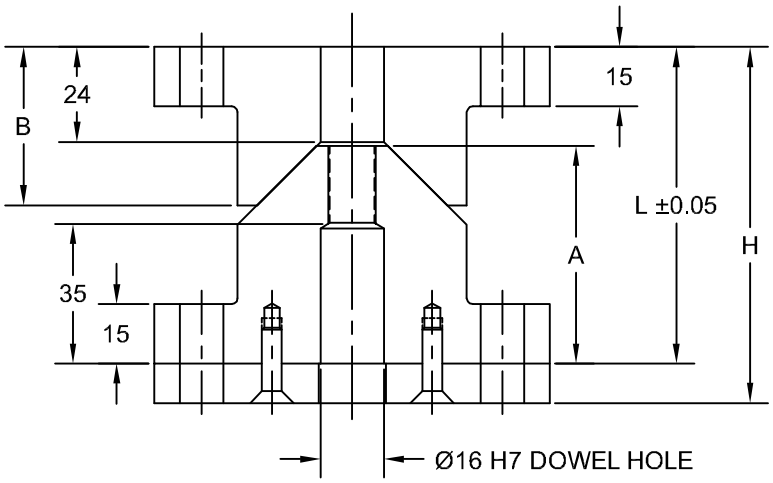

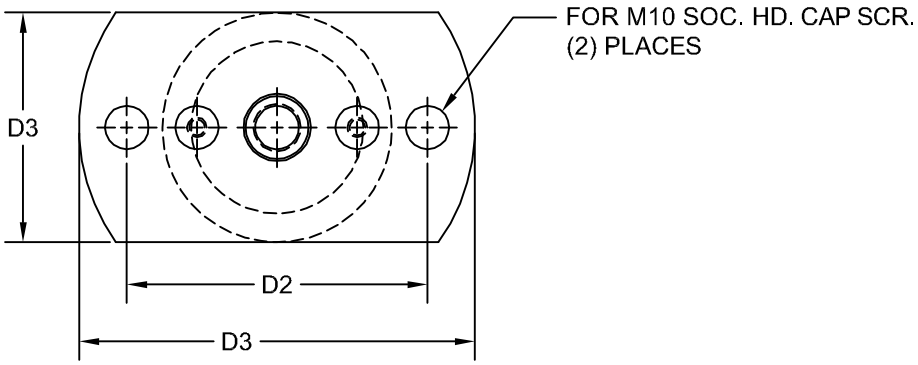

JOLICO NUMBER	CHRYSLER CC NUMBER	D1	D2	D3	L	H	A	B
J-223202	19-010-0176	100	76	58	80	90	55	40
J-223203	19-010-0183	120	96	78	90	100	65	50

JOLICO J-B TOOL

PRINTED COPY IS UNCONTROLLED

CONE BALANCER SHIM STOCK

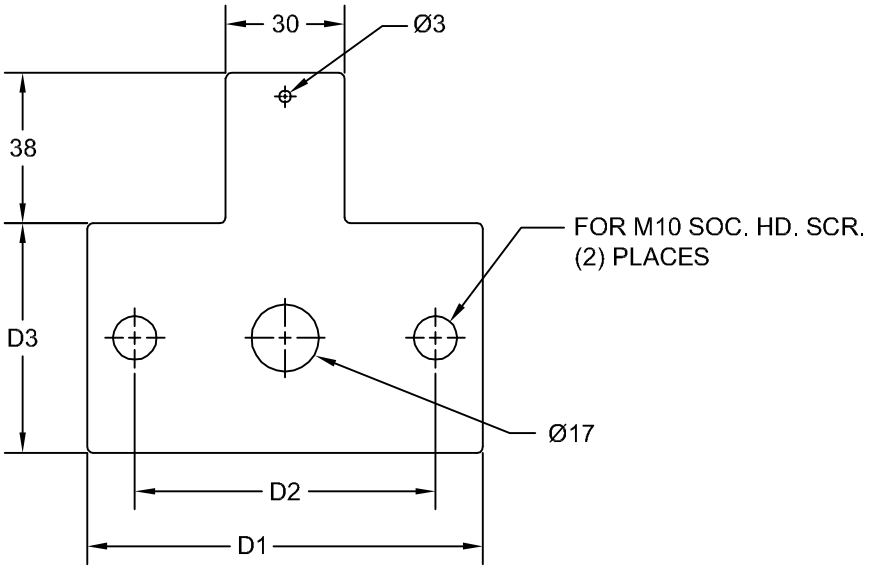

SHIM STOCK 0.5 THICK

JOLICO NUMBER	D1	D2	D3
J-223302	100	76	58
J-223303	120	96	78

JOLICO J-B TOOL

PRINTED COPY IS UNCONTROLLED

SCRAP CHUTE RETAINER AND HOOK

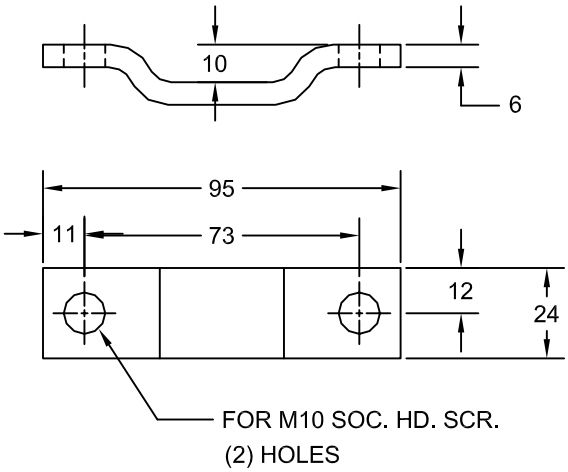

SCRAP CHUTE RETAINER

JOLICO NUMBER	CHRYSLER CC NUMBER
J-63101	19-010-3051

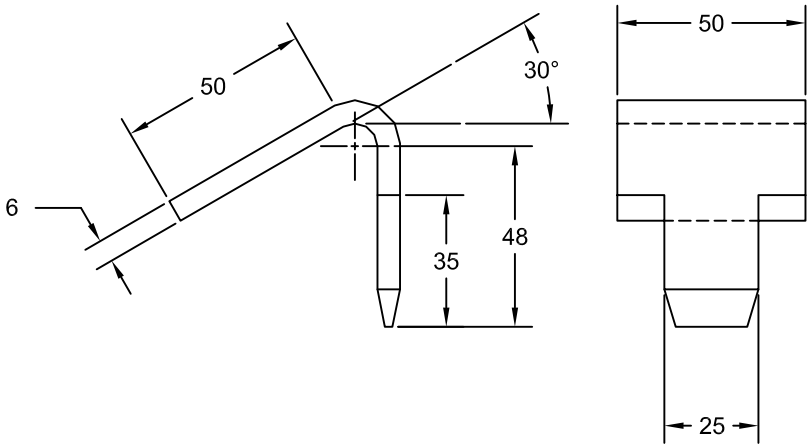

SCRAP CHUTE HOOK

JOLICO NUMBER	CHRYSLER CC NUMBER
J-63102	19-010-3050

JOLICO J-B TOOL

PRINTED COPY IS UNCONTROLLED

HORIZONTAL STORAGE OR HINGE BRACKET

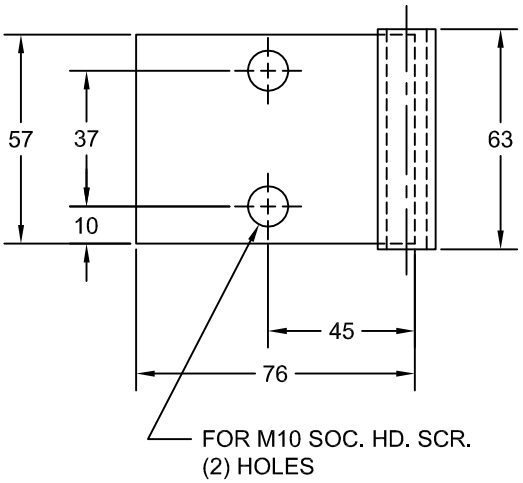

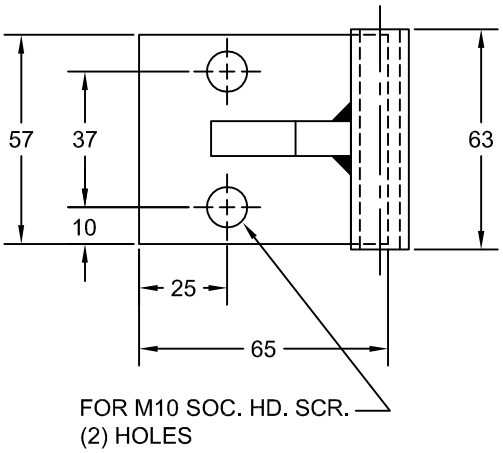

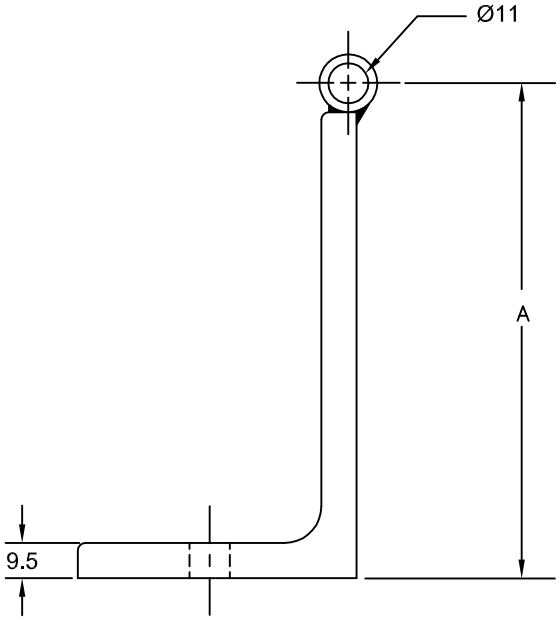

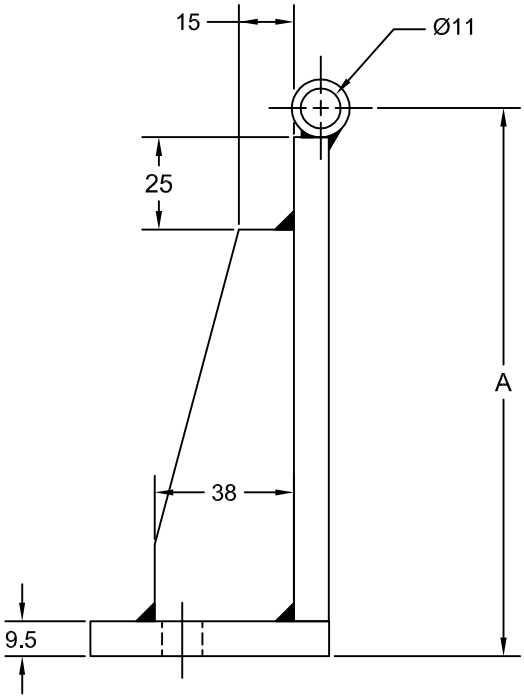

HORIZONTAL STORAGE OR HINGE BRACKET

JOLICO NUMBER	CHRYSLER CC NUMBER	A DIM.
J-663410-060	19-010-3206	60
J-663410-070	19-010-3207	70
J-663410-080	19-010-3208	80
J-663410-090	19-010-3209	90
J-663410-100	19-010-3210	100
J-663410-110	19-010-3211	110
J-663410-120	19-010-3212	120
J-663410-130	19-010-3213	130

HORIZONTAL EXTENDED STORAGE OR HINGE BRACKET

JOLICO NUMBER	CHRYSLER CC NUMBER	A DIM.
J-663411-150	19-010-3215	150
J-663411-200	19-010-3220	200
J-663411-250	19-010-3225	250
J-663411-300	19-010-3230	300
J-663411-350	19-010-3235	350
J-663411-400	19-010-3240	400

JOLICO J-B TOOL

PRINTED COPY IS UNCONTROLLED

RETAINER BRACKETS

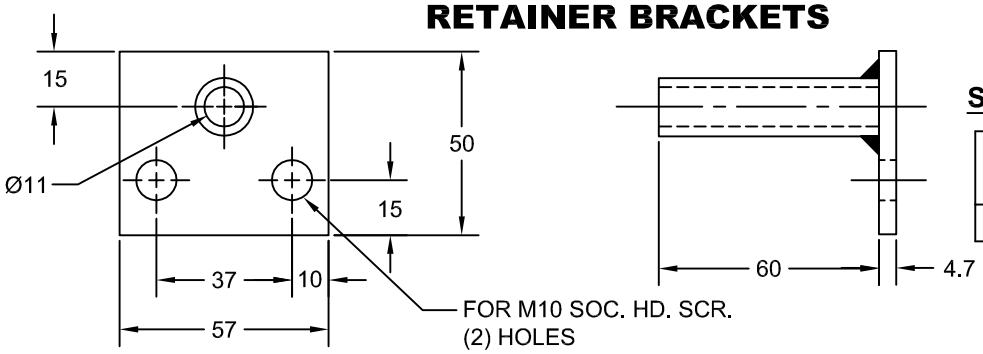

STUB RETAINER BRACKET

JOLICO NUMBER	CHRYSLER CC NUMBER
J-663430	19-010-3100

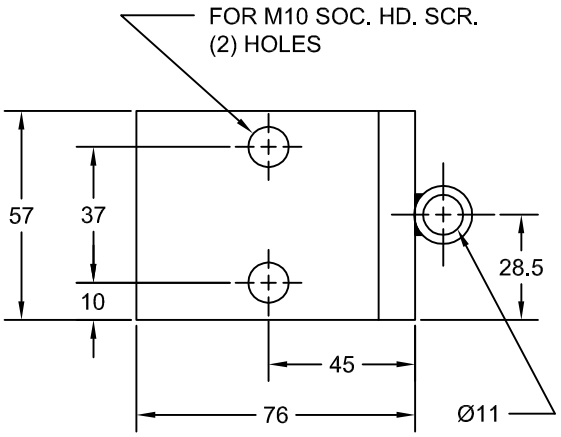

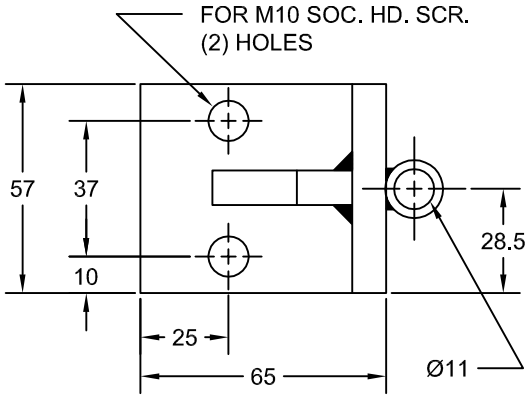

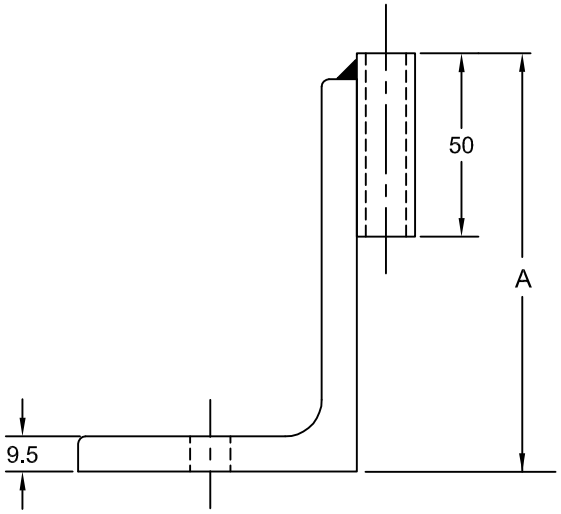

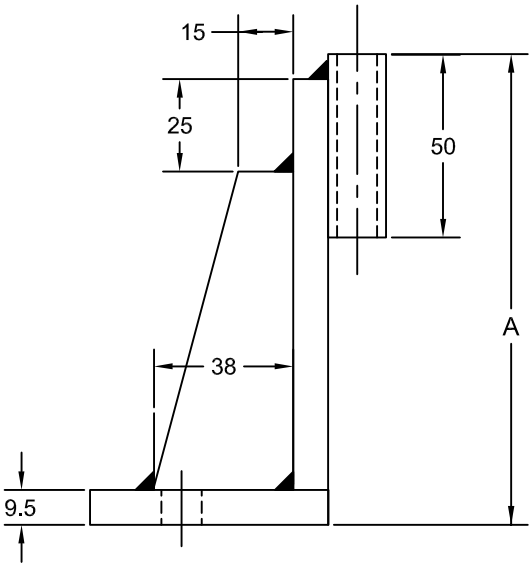

VERTICAL RETAINER BRACKET

JOLICO NUMBER	CHRYSLER CC NUMBER	A DIM.
J-663420-060	19-010-3106	60
J-663420-070	19-010-3107	70
J-663420-080	19-010-3108	80
J-663420-090	19-010-3109	90
J-663420-100	19-010-3110	100
J-663420-110	19-010-3111	110
J-663420-120	19-010-3112	120
J-663420-130	19-010-3113	130

VERTICAL EXTENDED RETAINER BRACKET

JOLICO NUMBER	CHRYSLER CC NUMBER	A DIM.
J-663421-150	19-010-3115	150
J-663421-200	19-010-3120	200
J-663421-250	19-010-3125	250
J-663421-300	19-010-3130	300
J-663421-350	19-010-3135	350
J-663421-400	19-010-3140	400

JOLICO J-B TOOL

PRINTED COPY IS UNCONTROLLED

HINGE AND STORAGE PIN

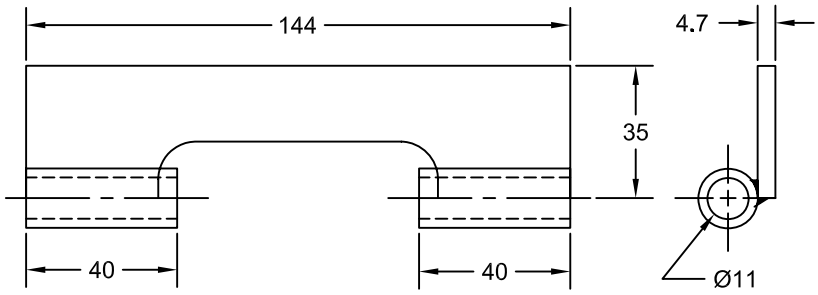

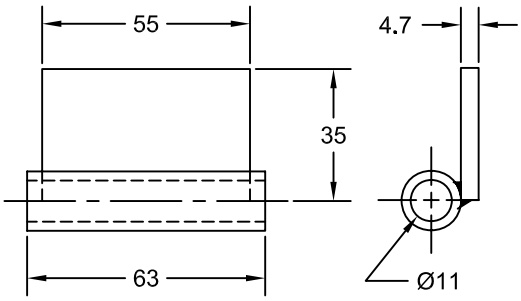

DUAL HINGE

JOLICO NUMBER	CHRYSLER CC NUMBER
J-663400	19-010-3070

HINGE OR PIN GUIDE

JOLICO NUMBER	CHRYSLER CC NUMBER
J-663401	19-010-3071

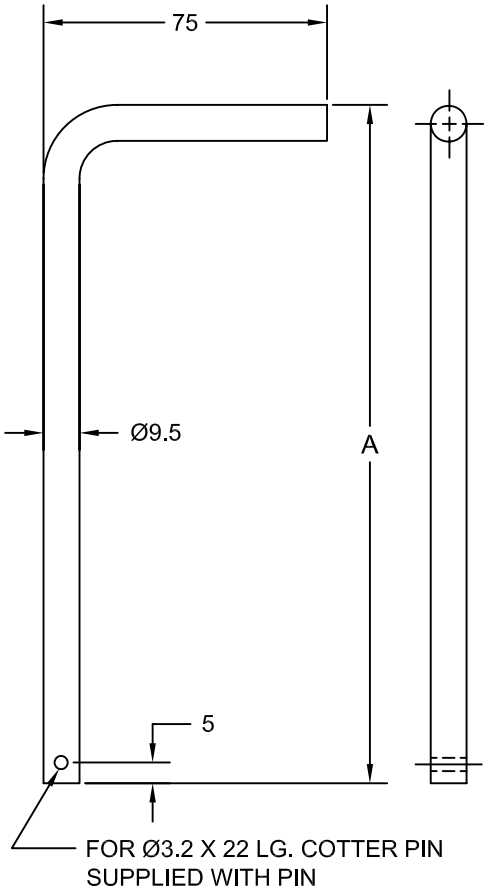

STORAGE PIN

JOLICO NUMBER	CHRYSLER CC NUMBER	A DIM.
J-663403-150	19-010-3015	150
J-663403-200	19-010-3020	200
J-663403-250	19-010-3025	250
J-663403-300	19-010-3030	300

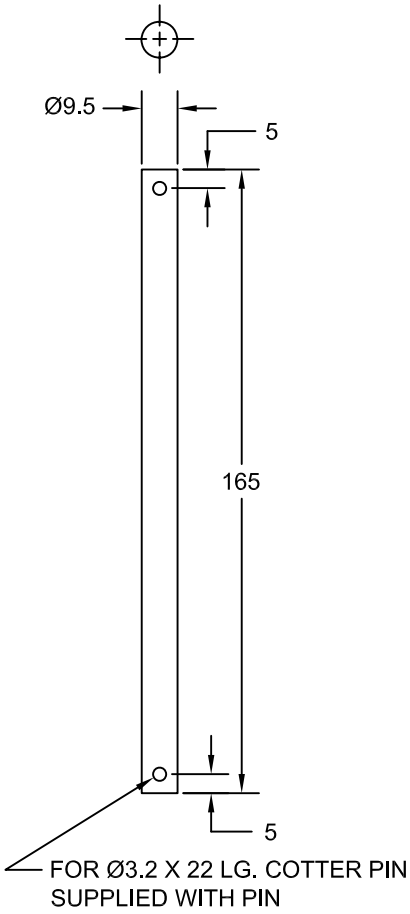

HINGE PIN

JOLICO NUMBER	CHRYSLER CC NUMBER
J-663402	19-010-3000

JOLICO J-B TOOL

PRINTED COPY IS UNCONTROLLED

CHAIN AND CHAIN HOOKS

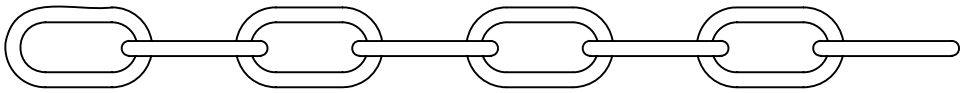

COIL CHAIN-STRAIGHT LINKS

JOLICO NUMBER	CHRYSLER CC NUMBER
J-663422	19-010-3090

ORDERING EXAMPLE
J-663422 - 5 FT.
CHAIN LENGTH
ORDER CHAIN PER FOOT

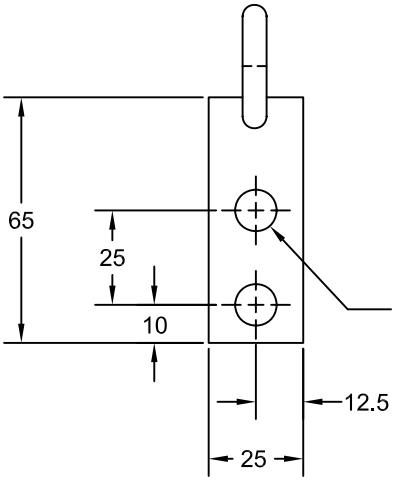

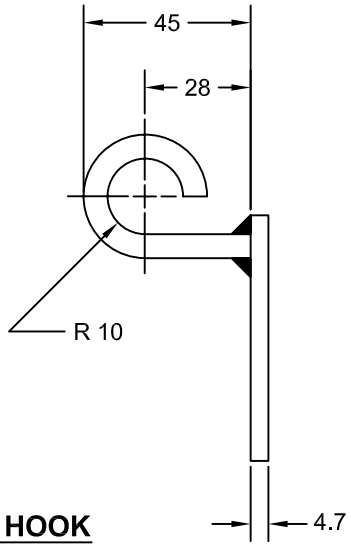

VERTICAL CHAIN HOOK

JOLICO NUMBER	CHRYSLER CC NUMBER
J-663431	19-010-3061

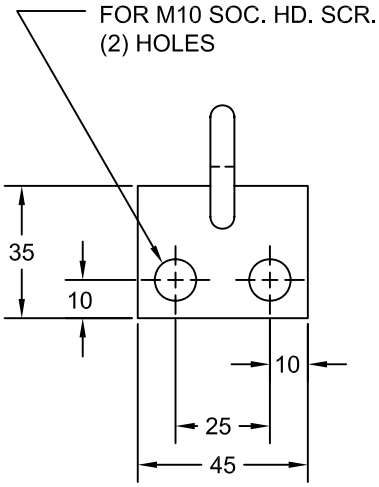

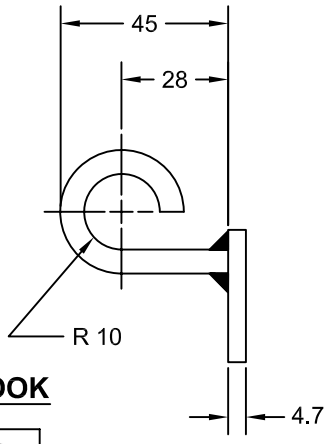

HORIZONTAL CHAIN HOOK

JOLICO NUMBER	CHRYSLER CC NUMBER
J-663432	19-010-3060

JOLICO J-B TOOL

PRINTED COPY IS UNCONTROLLED

PUNCH RETAINER RISER

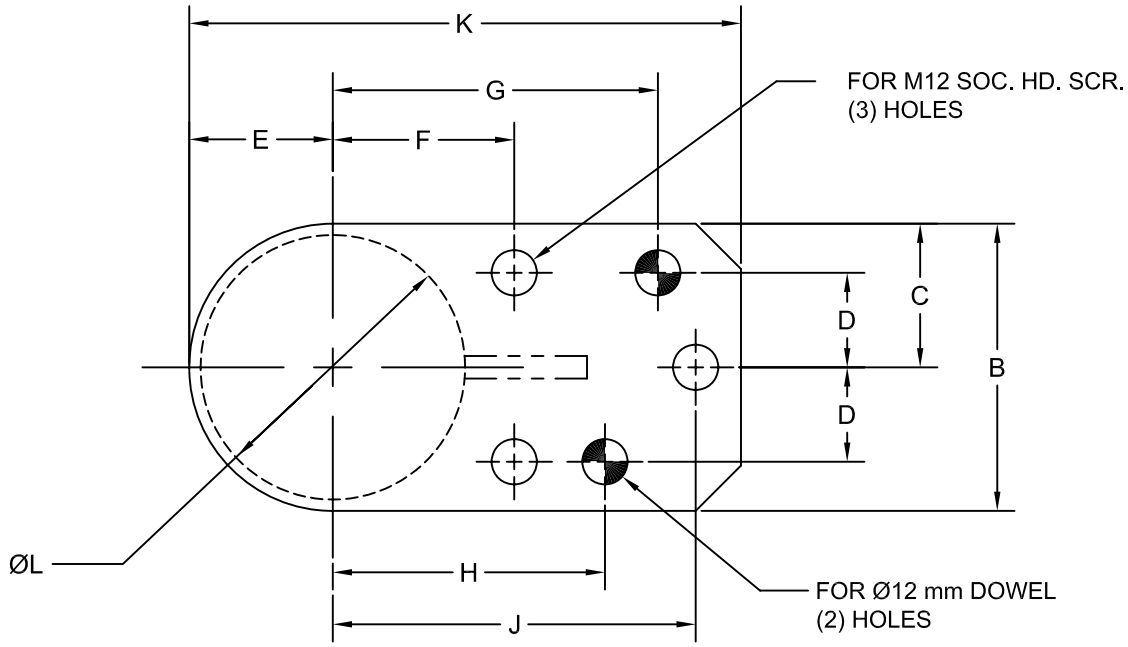

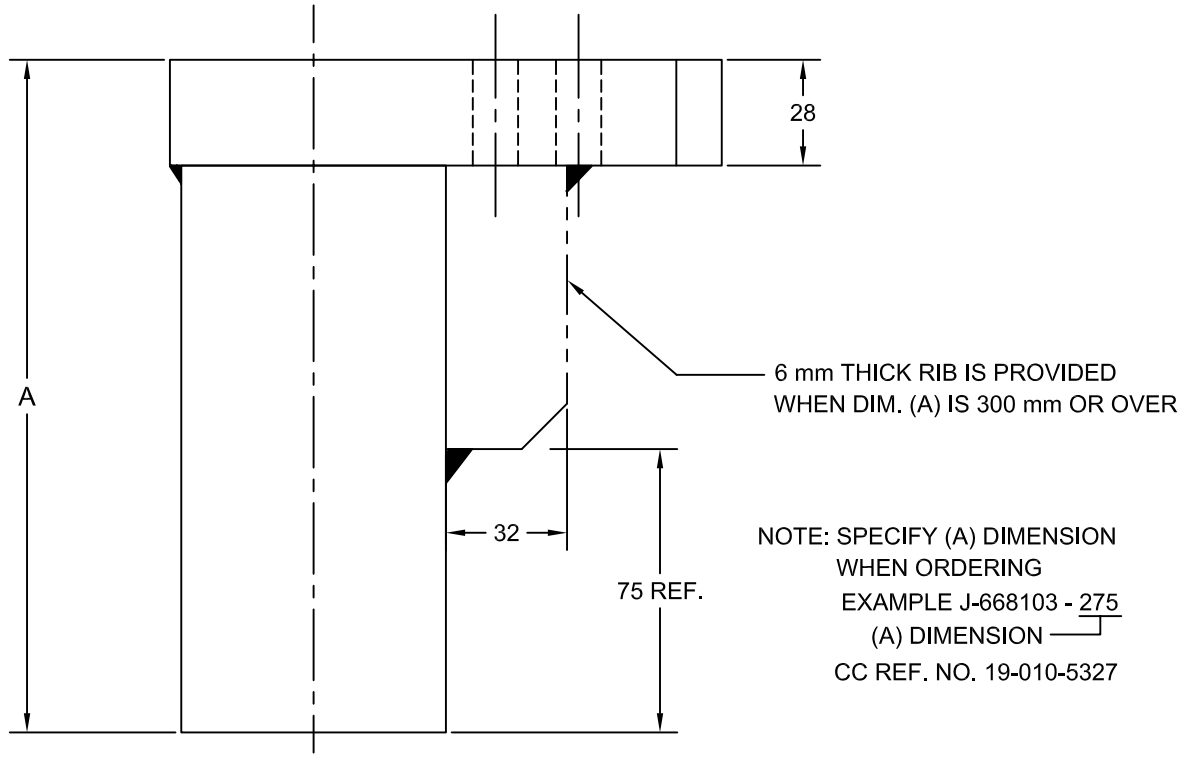

NOTE: SPECIFY (A) DIMENSION
WHEN ORDERING
EXAMPLE J-668103 - 275
(A) DIMENSION
CC REF. NO. 19-010-5327

JOLICO NUMBER	CHRYSLER CC NUMBER	B	C	D	E	F	G	H	J	K	L
J-668103	19-010-53 - -	64	32	20	32	44	82	66	90	134	Ø60
J-668104	19-010-54 - -	76	38	25	38	48	88	70	96	146	Ø70
J-668105	19-010-55 - -	82	41	28	42	50	92	74	98	152	Ø75

A DIMENSION	150	175	200	225	250	275	300	325	350	375	400	425	450	475	500
JOLICO NO.	150	175	200	225	250	275	300	325	350	375	400	425	450	475	500
CHRYSLER CC NO.	15	17	20	22	25	27	30	32	35	37	40	42	45	47	50

JOLICO J-B TOOL

PRINTED COPY IS UNCONTROLLED

PUNCH RETAINER RISER

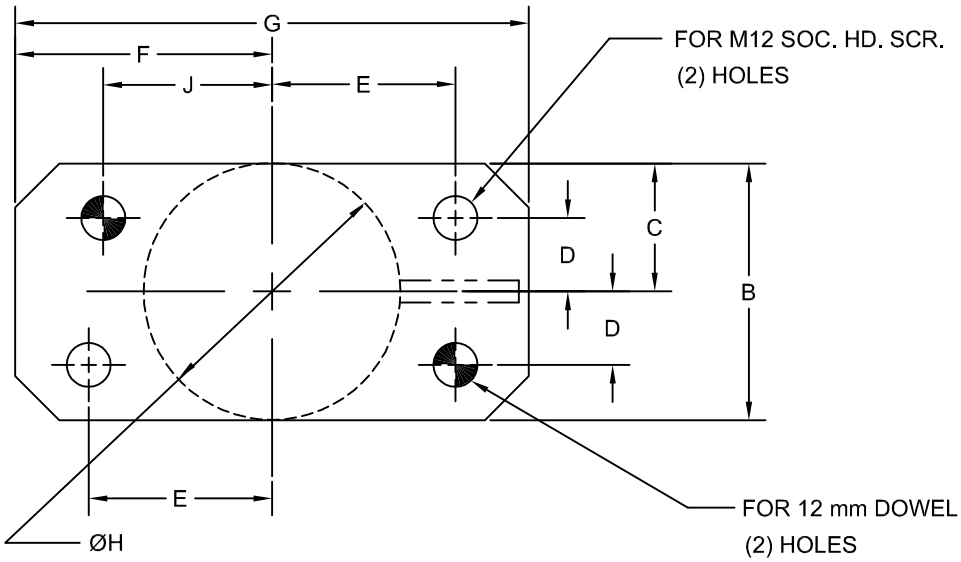

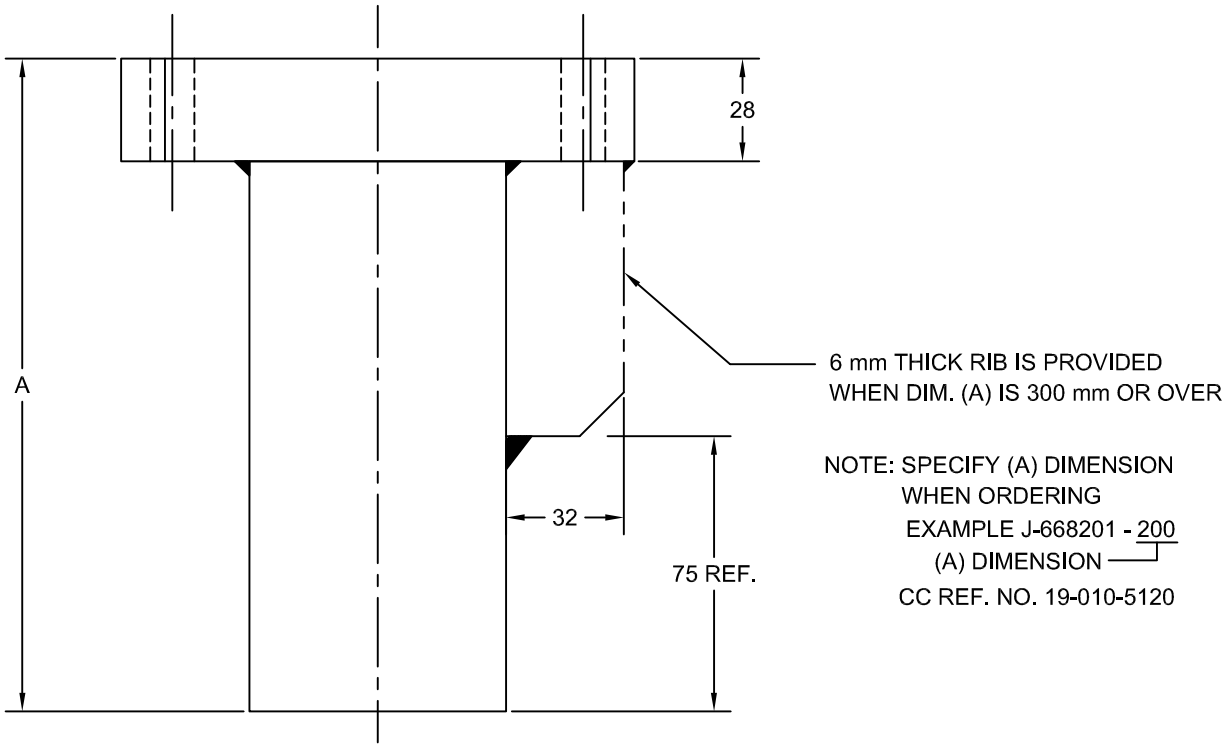

JOLICO NUMBER	CHRYSLER CC NUMBER	B	C	D	E	F	G	H	J
J - 668200	19 - 010 - 50 - -	64	32	20	45	64	128	Ø60	41
J - 668201	19 - 010 - 51 - -	70	35	20	50	70	140	Ø70	46
J - 668202	19 - 010 - 52 - -	76	38	22	54	73	146	Ø75	50

A DIMENSION	150	175	200	225	250	275	300	325	350	375	400	425	450	475	500
JOLICO NO.	150	175	200	225	250	275	300	325	350	375	400	425	450	475	500
CHRYSLER CC NO.	15	17	20	22	25	27	30	32	35	37	40	42	45	47	50

JOLICO J-B TOOL

PRINTED COPY IS UNCONTROLLED

CHUTE LATCH

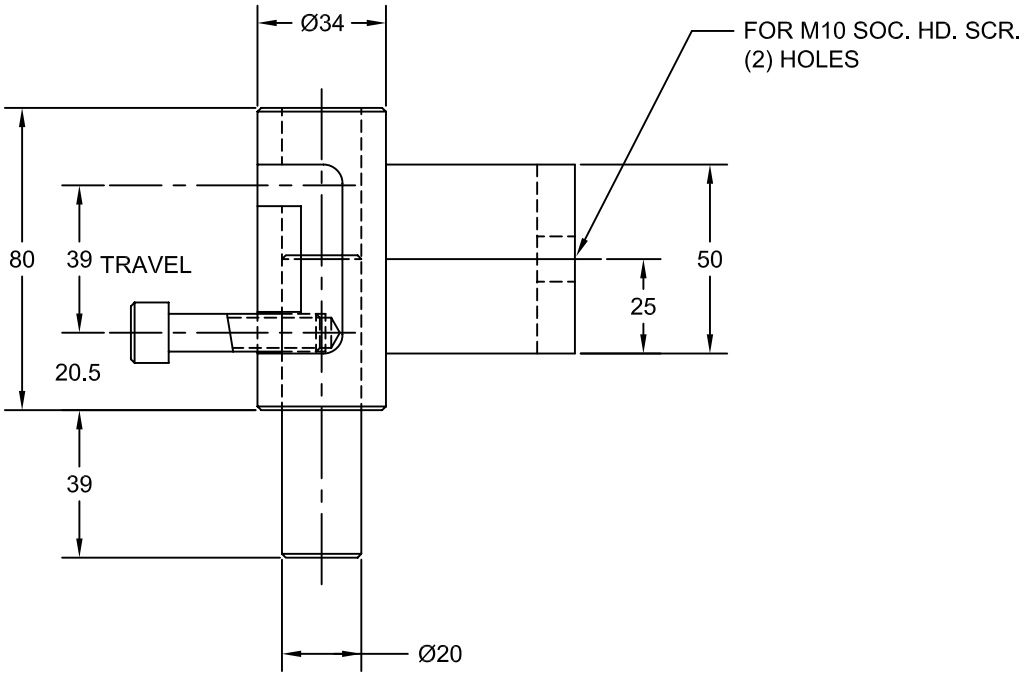

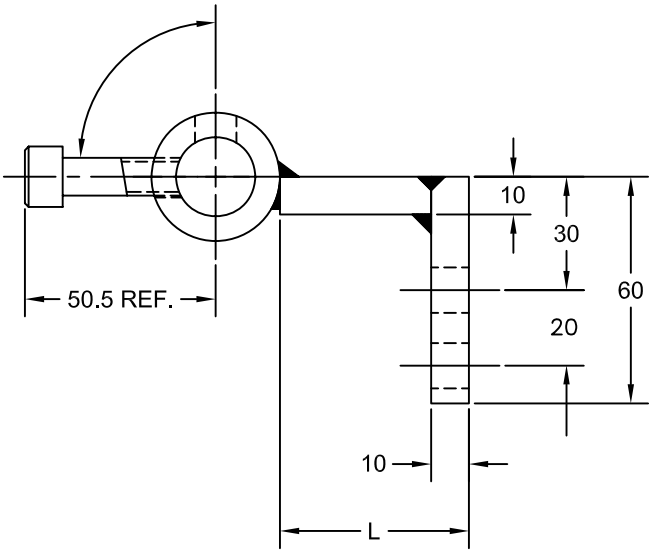

JOLICO NUMBER	CHRYSLER CC NUMBER	L DIM.
J-663120	19-010-3080	20
J-663122	19-010-3082	40
J-663124	19-010-3084	60
J-663126	19-010-3086	80
J-663128	19-010-3088	100

JOLICO J-B TOOL

PRINTED COPY IS UNCONTROLLED

SELF LUBE GIB PLATES

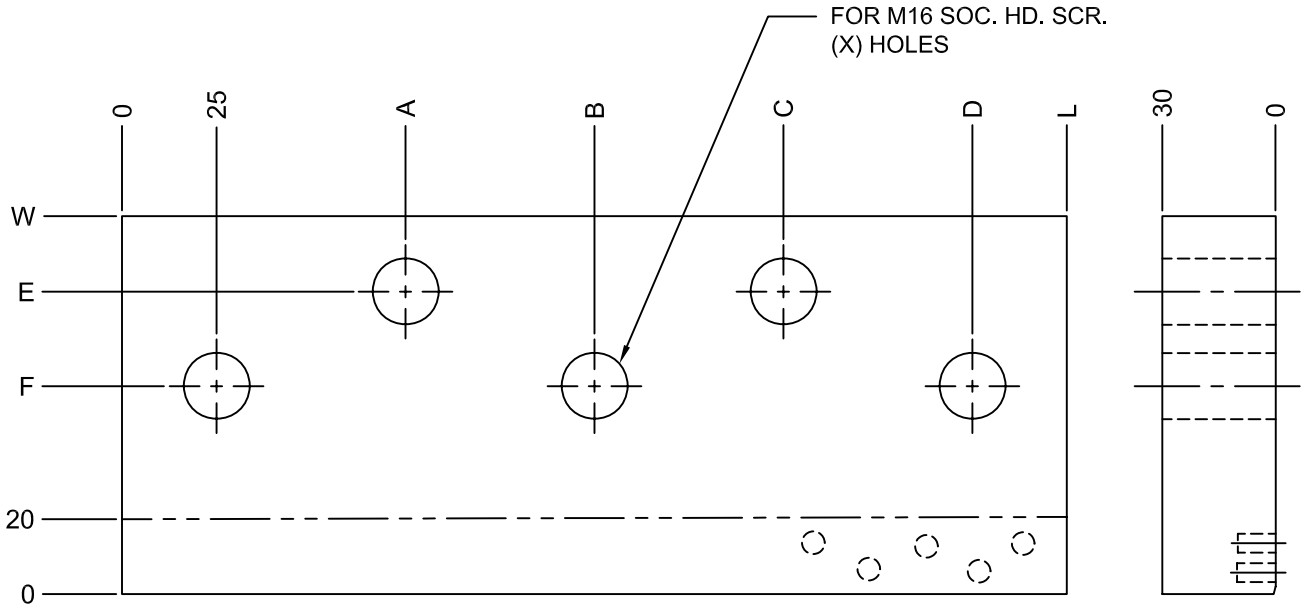

TOLERANCE BETWEEN SCREW HOLES ±0.25

JOLICO NUMBER	CHRYSLER CC REF. NO.		W	L	X HOLES	A	B	C	D	E	F
	DRILLED	UNDRILLED									
J-444328	19-010-8805	19-010-8905		200	3	100			175		
J-444329	19-010-8810	19-010-8910		250	4	90		160	225		
J-444330	19-010-8815	19-010-8915	100	315		90	158	225	290	80	55
J-444331	19-010-8820	19-010-8920		350	5	100	175	250	325		
J-444332	19-010-8825	19-010-8925		400		115	200	285	375		
J-444333	19-010-8830	19-010-8930		450		125	225	325	425		
J-444334	19-010-8835	19-010-8935		200	3	100			175		
J-444335	19-010-8840	19-010-8940		250	4	90		160	225		
J-444336	19-010-8845	19-010-8945	125	315		90	158	225	290	105	65
J-444337	19-010-8850	19-010-8950		350	5	100	175	250	325		
J-444338	19-010-8855	19-010-8955		400		115	200	285	375		
J-444339	19-010-8860	19-010-8960		450		125	225	325	425		
J-444340	19-010-8865	19-010-8965		200	3	100			175		
J-444341	19-010-8870	19-010-8970		250	4	90		160	225		
J-444342	19-010-8875	19-010-8975	150	315		90	158	225	290	130	65
J-444343	19-010-8880	19-010-8980		350	5	100	175	250	325		
J-444344	19-010-8885	19-010-8985		400		115	200	285	375		
J-444345	19-010-8890	19-010-8990		450		125	225	325	425		

NOTE:
FOR GIB PLATE WITHOUT SCREW HOLES ADD THE SUFFIX (N) TO THE ORDERING NUMBER.

ORDERING EXAMPLE:
J-444335 - N
NO SCREW HOLES

JOLICO J-B TOOL

PRINTED COPY IS UNCONTROLLED

U AND V DRIVERS 75 mm WIDE

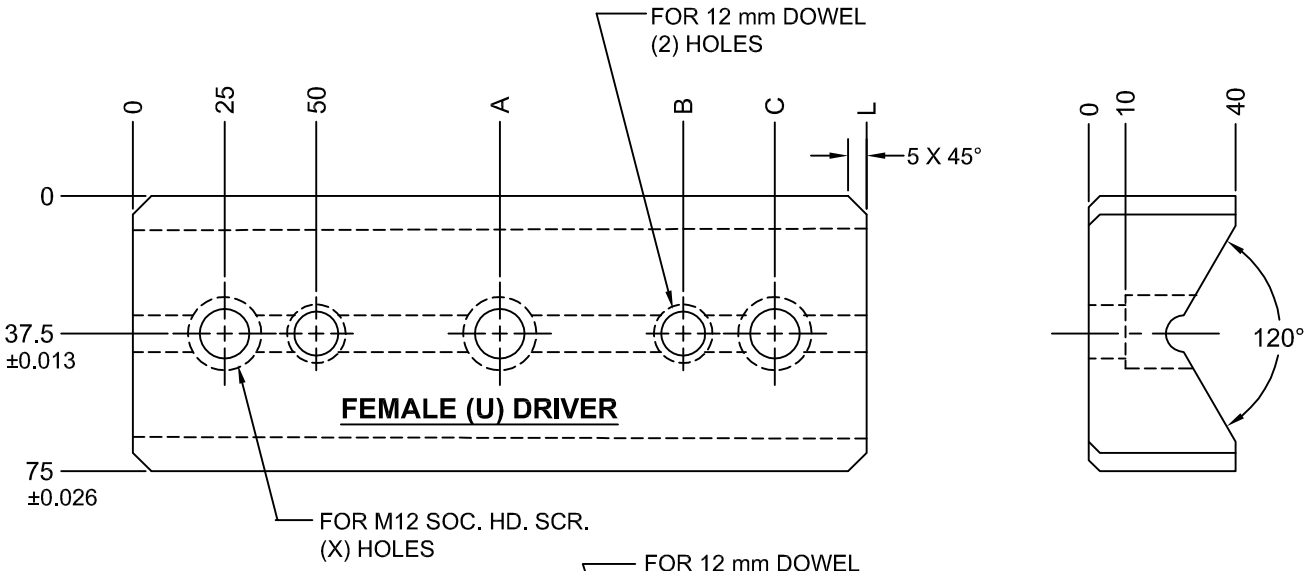

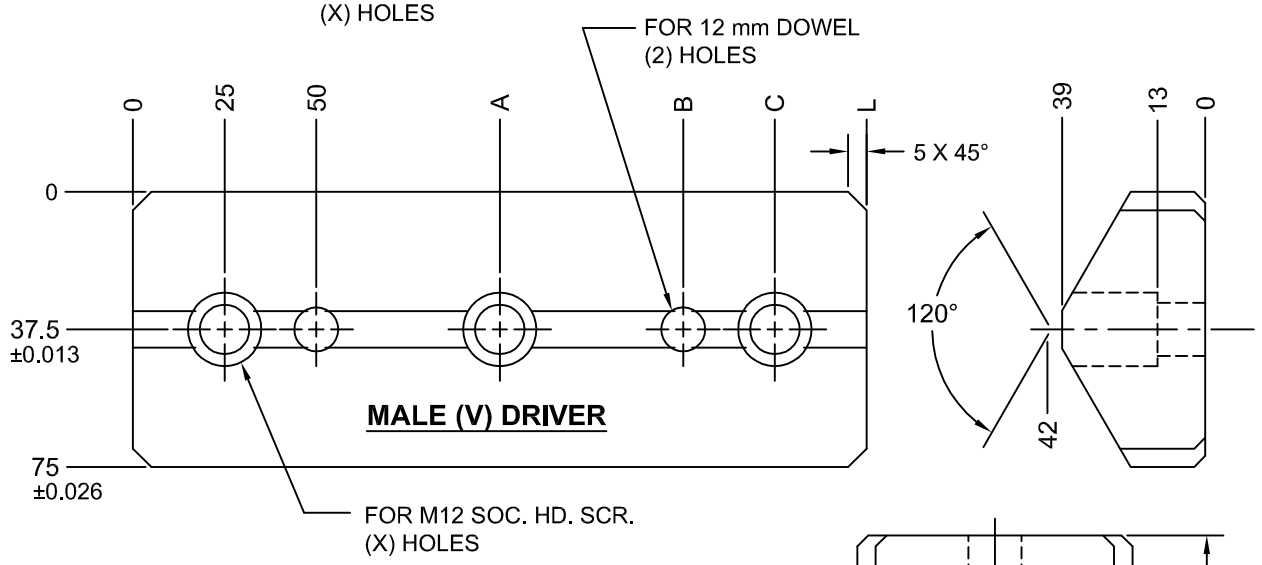

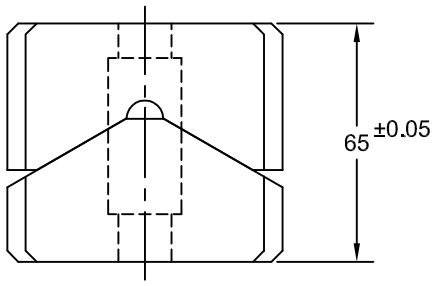

END VIEW

FEMALE (U) DRIVER STEEL NO GRAPHITE PLUGS						(X)
JOLICO NO.	CC REF. NO.	L	A	B	C	HOLES
J-223360-F	19-010-8405	150	—	100	125	2
J-223361-F	19-010-8410	200	—	150	175	2
J-223365-F	19-010-8415	250	125	200	225	3
J-223366-F	19-010-8420	300	150	250	275	3

MALE (V) DRIVER BRONZE WITH GRAPHITE PLUGS						(X)
JOLICO NO.	CC REF. NO.	L	A	B	C	HOLES
J-223360-YGM	19-010-8455	150	—	100	125	2
J-223361-YGM	19-010-8460	200	—	150	175	2
J-223367-YGM	19-010-8465	250	125	200	225	3
J-223368-YGM	19-010-8470	300	150	250	275	3

TOLERANCE BETWEEN DOWEL HOLES ±0.01

TOLERANCE BETWEEN SCREW HOLES ±0.12

JOLICO J-B TOOL

PRINTED COPY IS UNCONTROLLED

U AND V DRIVER 125 mm WIDE

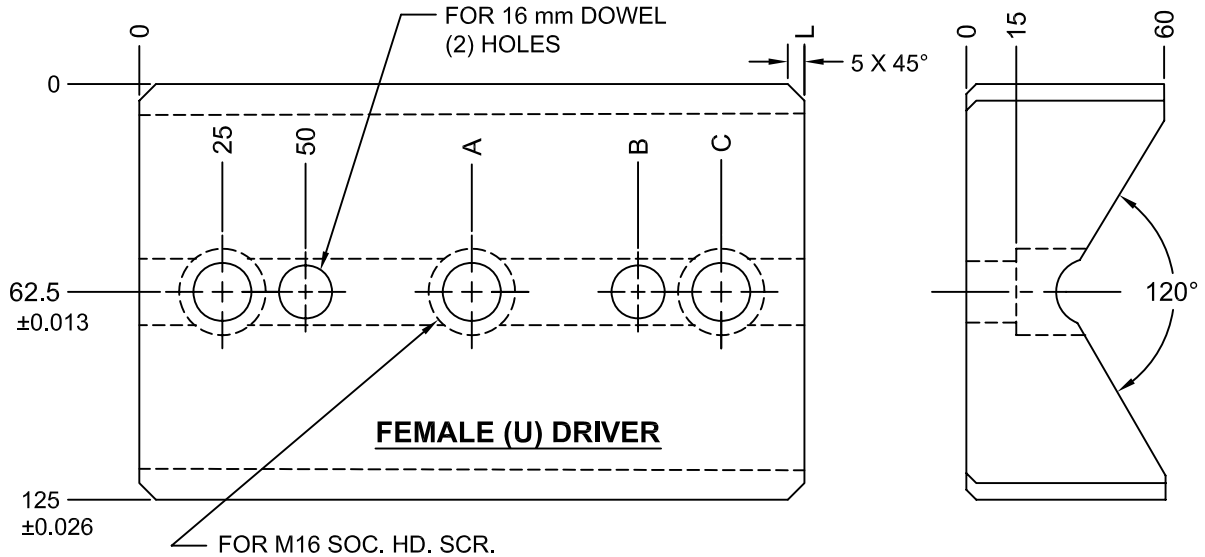

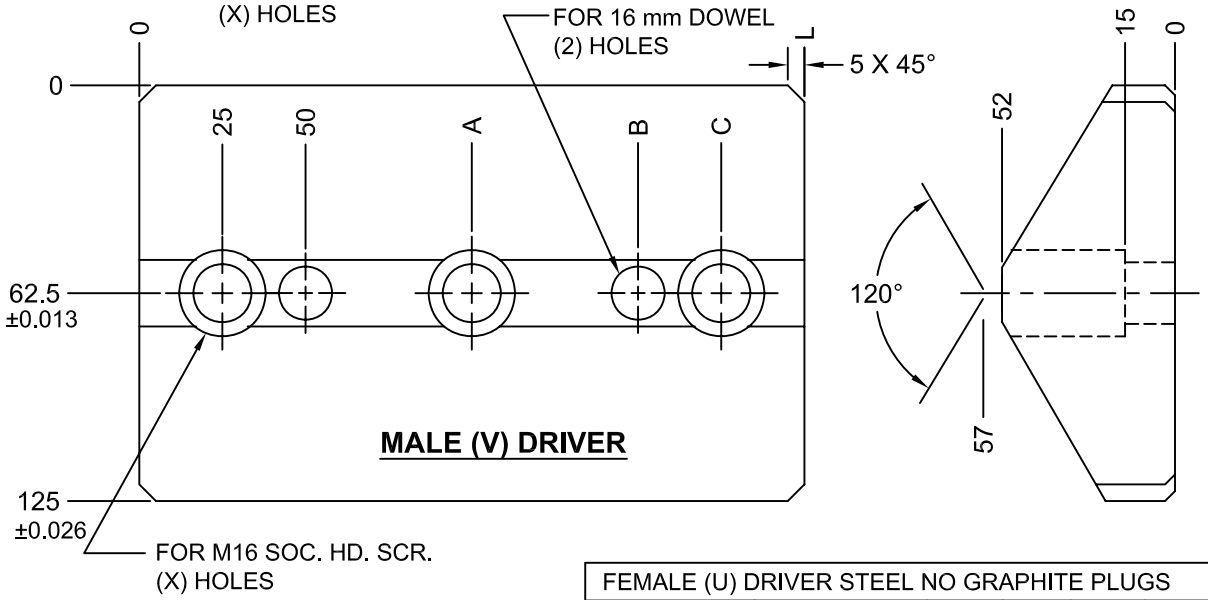

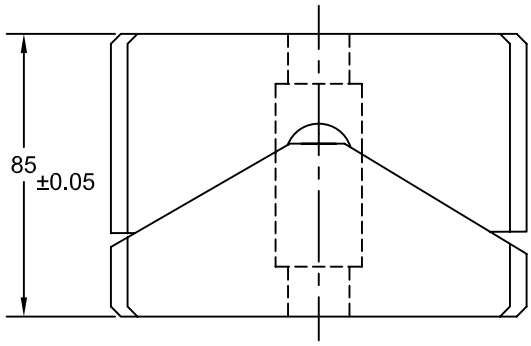

END VIEW

FEMALE (U) DRIVER STEEL NO GRAPHITE PLUGS						(X)
JOLICO NO.	CC REF. NO.	L	A	B	C	HOLES
J-223370-F	19-010-8430	150	—	100	125	2
J-223371-F	19-010-8435	200	—	150	175	2
J-223374-F	19-010-8440	250	125	200	225	3
J-223375-F	19-010-8445	300	150	250	275	3

MALE (V) DRIVER BRONZE WITH GRAPHITE PLUGS						(X)
JOLICO NO.	CC REF. NO.	L	A	B	C	HOLES
J-223370-YGM	19-010-8480	150	—	100	125	2
J-223371-YGM	19-010-8485	200	—	150	175	2
J-223376-YGM	19-010-8490	250	125	200	225	3
J-223377-YGM	19-010-8495	300	150	250	275	3

TOLERANCE BETWEEN DOWEL HOLES ±0.01

TOLERANCE BETWEEN SCREW HOLES ±0.12

JOLICO J-B TOOL

PRINTED COPY IS UNCONTROLLED

U AND V DRIVER 175 mm WIDE

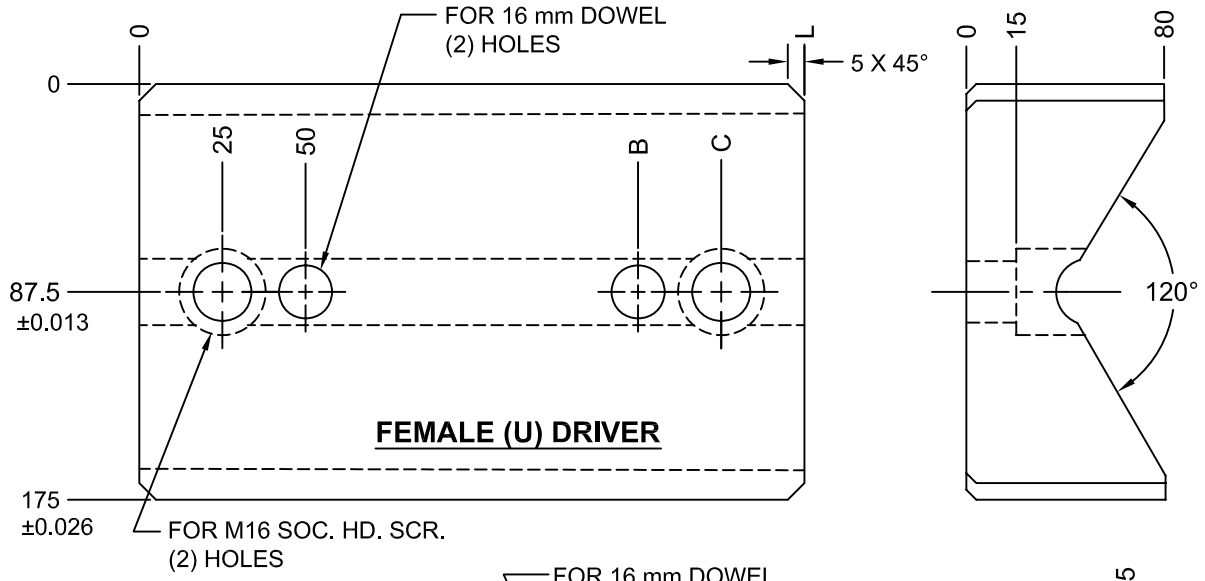

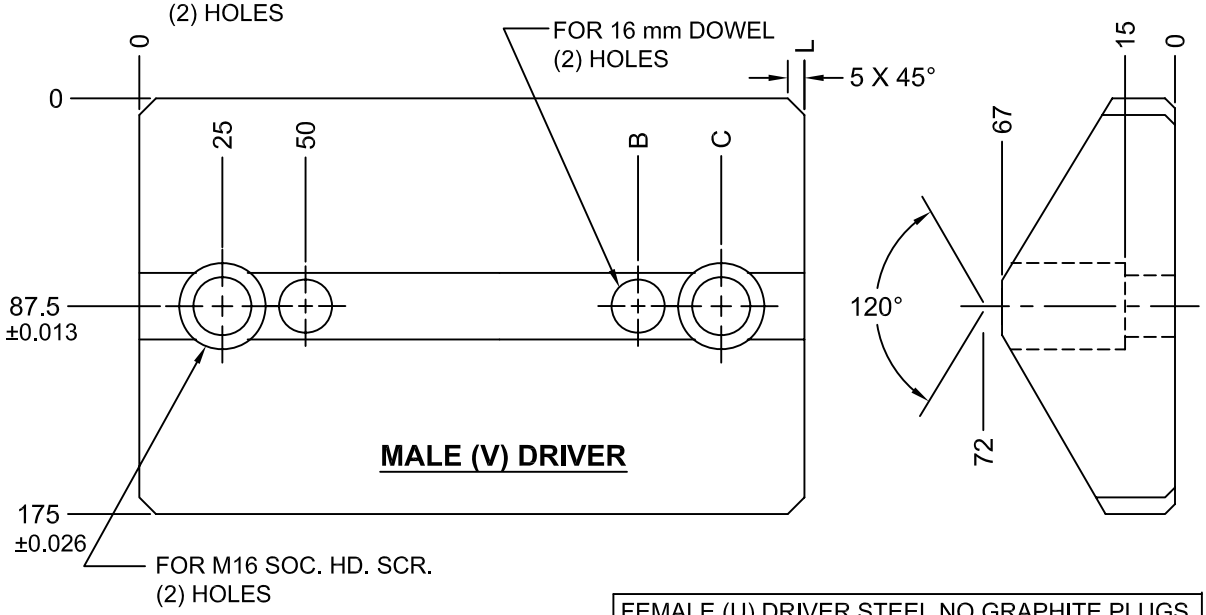

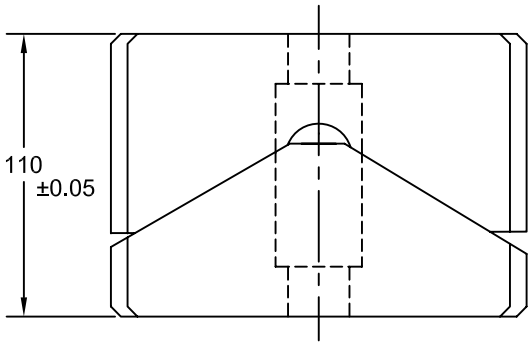

END VIEW

FEMALE (U) DRIVER STEEL NO GRAPHITE PLUGS				
JOLICO NUMBER	CHRYSLER CC NUMBER	L	B	C
J-223480-F	19-010-8447	150	100	125
J-223481-F	19-010-8449	200	150	175

MALE (V) DRIVER BRONZE WITH GRAPHITE PLUGS				
JOLICO NUMBER	CHRYSLER CC NUMBER	L	B	C
J-223480-YGM	19-010-8497	150	100	125
J-223481-YGM	19-010-8499	200	150	175

TOLERANCE BETWEEN DOWEL HOLES ±0.01

TOLERANCE BETWEEN SCREW HOLES ±0.12

JOLICO J-B TOOL

PRINTED COPY IS UNCONTROLLED

LOWER V-GUIDE BLOCK
ALUMINUM BRONZE BLOCK WITH GRAPHITE PLUGS

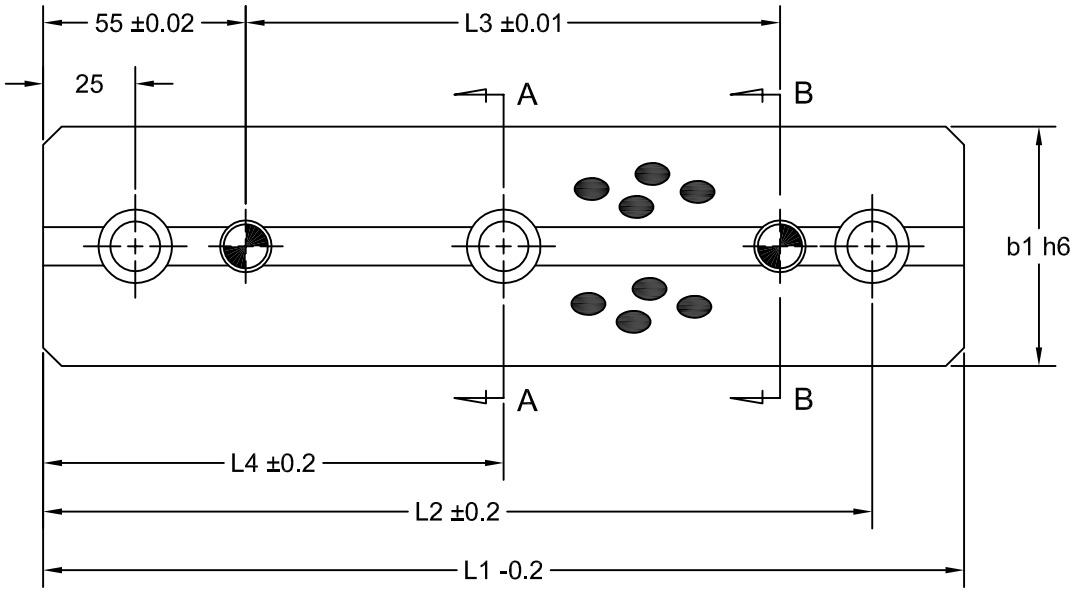

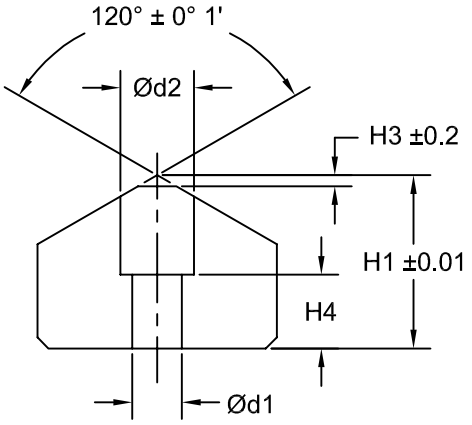

SECTION A - A

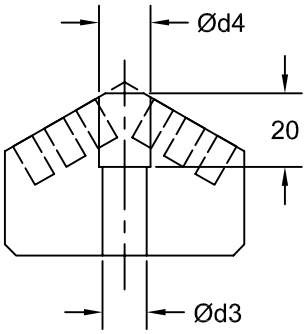

SECTION B - B

JOLICO NUMBER	CHRYSLER CC NUMBER	b1	H1	L1	L2	L3	L4	H3	H4	d1	d2	d3	d4	SCREW SIZE	SCREW NO.
J-223345-YGM	19-205-0205	65	47	150	125	45	- - -	3	20	13.5	20	12	14	M12	2
J-223346-YGM	19-205-0206			200	175	95	- - -								
J-223347-YGM	19-205-0207			250	225	145	125								3
J-223348-YGM	19-205-0208			300	275	195	150								
J-223340-YGM	19-205-0209	125	57	150	125	45	- - -	5	15	17.5	26	16	18	M16	2
J-223341-YGM	19-205-0210			200	175	95	- - -								
J-223342-YGM	19-205-0211			250	225	145	125								3
J-223343-YGM	19-205-0212			300	275	195	150								

JOLICO J-B TOOL

PRINTED COPY IS UNCONTROLLED

UPPER V-GUIDE BLOCK
STEEL BLOCK WITH NO GRAPHITE PLUGS

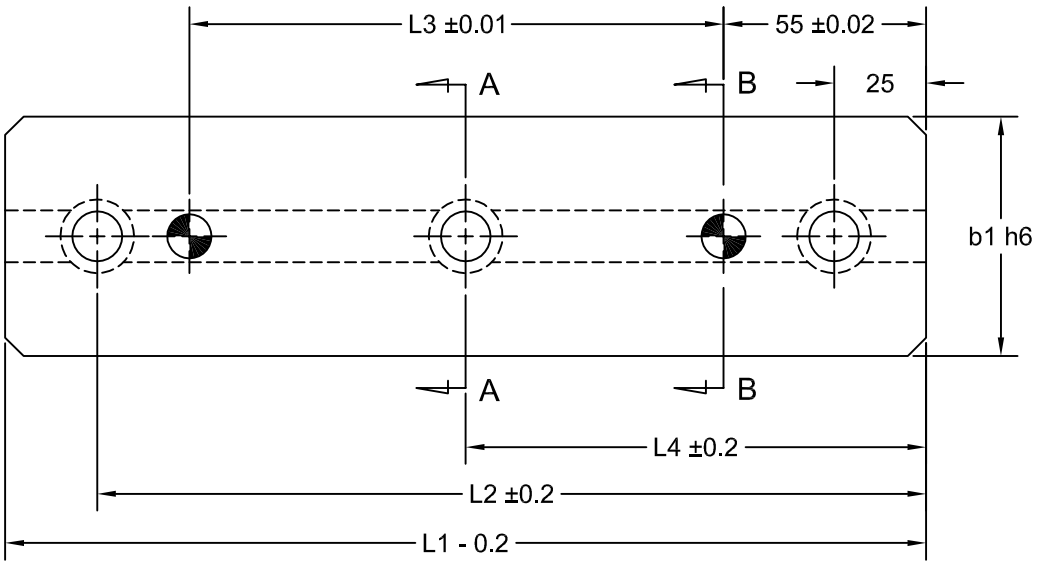

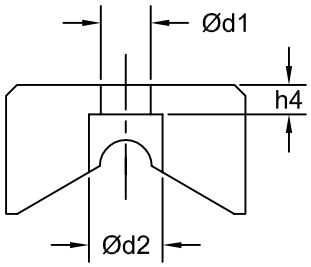

SECTION A - A

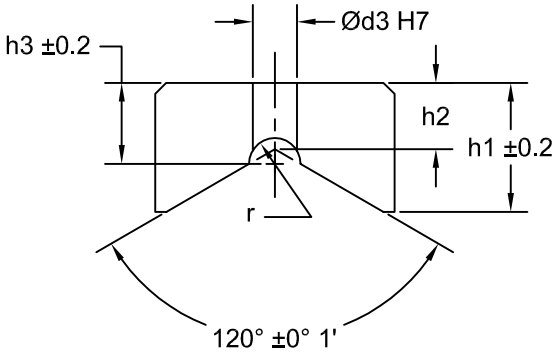

SECTION B - B

JOLICO NUMBER	CHRYSLER CC NUMBER	b1	h1	L1	L2	L3	L4	h2	h3	h4	r	d1	d2	d3	SCREW SIZE	SCREW NO.
J-223345-F	19-205-0213	65	35	150	125	45	- - -	18	22	8	7	13.5	20	12	M12	2
J-223346-F	19-205-0214			200	175	95	- - -									
J-223347-F	19-205-0215			250	225	145	125									3
J-223348-F	19-205-0216			300	275	195	150									
J-223340-F	19-205-0217	125	60	150	125	45	- - -	28	34	15	10	17.5	26	16	M16	2
J-223341-F	19-205-0218			200	175	95	- - -									
J-223342-F	19-205-0219			250	225	145	125									3
J-223343-F	19-205-0221			300	275	195	150									

JOLICO J-B TOOL

PRINTED COPY IS UNCONTROLLED

CAM DEWELL WEAR PLATES

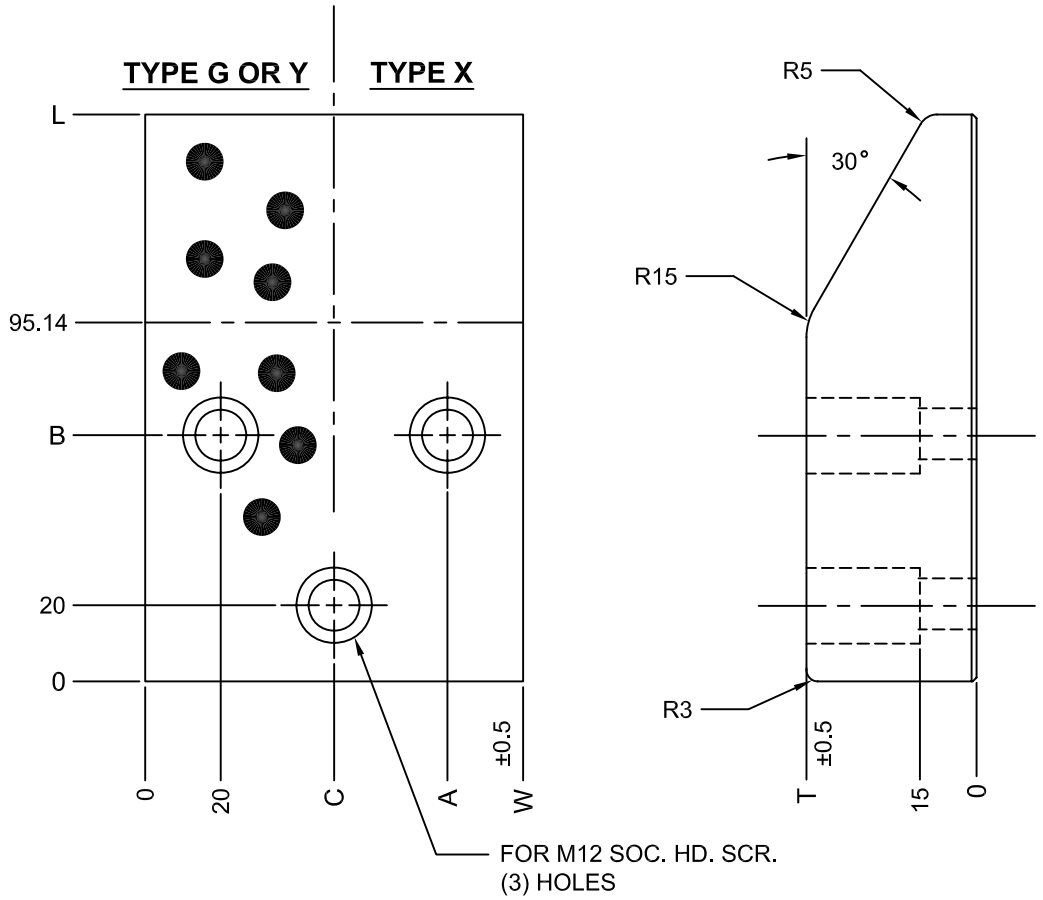

TOLERANCE BETWEEN SCREW HOLES ±0.25

JOLICO NUMBER	CHRYSLER CC REF. NUMBER								
	TYPE (X)	TYPE (G)	TYPE (Y)	T	W	L	A	B	C
J-442260-	19-296-4014	19-296-4044	19-296-4074	30	100	125	80	70	50
J-442261-	19-296-4015	19-296-4045	19-296-4075	30	125	125	105	70	62.5
J-442266-	19-296-4016	19-296-4046	19-296-4076	30	160	125	140	70	80
J-442262-	19-296-4024	19-296-4054	19-296-4084	45	100	150	80	65	50
J-442263-	19-296-4025	19-296-4055	19-296-4085	45	125	150	105	65	62.5
J-442267-	19-296-4026	19-296-4056	19-296-4086	45	160	150	140	65	80
J-442264-	19-296-4034	19-296-4064	19-296-4094	60	100	170	80	65	50
J-442265-	19-296-4035	19-296-4065	19-296-4095	60	125	170	105	65	62.5
J-442268-	19-296-4036	19-296-4066	19-296-4096	60	160	170	140	65	80

MATERIAL:
TYPE (G) STEEL WITH GRAPHITE PLUGS.
TYPE (X) STEEL NO GRAPHITE PLUGS.
TYPE (Y) ALUMINUM BRONZE WITH GRAPHITE PLUGS.

ORDERING EXAMPLE:
J-442264 - G
SPECIFY MATERIAL

JOLICO J-B TOOL

PRINTED COPY IS UNCONTROLLED

30° CAM DWELL WEAR PLATES

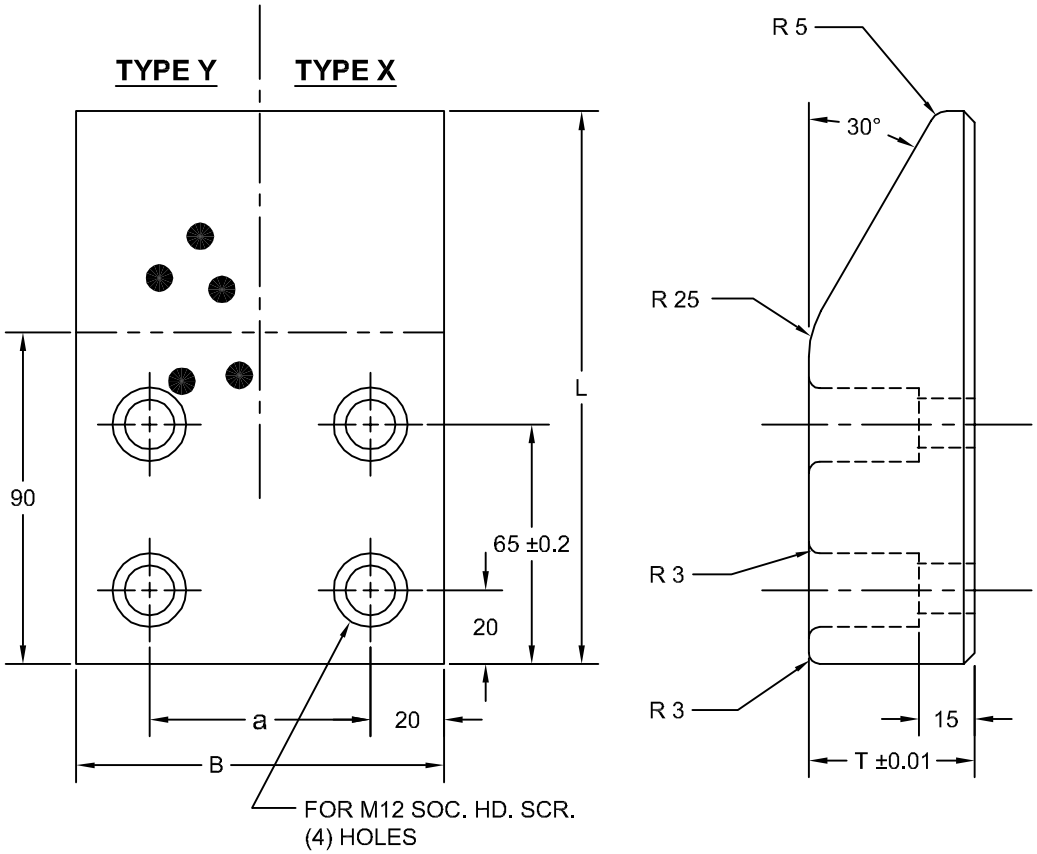

JOLICO NUMBER	COMMODITY CODE					
	TYPE (Y)	TYPE (X)	B	L	T	a
J-442281-	19-296-0222	19-296-0230	100	150	45	60
J-442282-	19-296-0221	19-296-0229		170	60	
J-442283-	19-296-0220	19-296-0228	125	150	45	85
J-442284-	19-296-0219	19-296-0227		170	60	
J-442285-	19-296-0218	19-296-0226	150	150	45	110
J-442286-	19-296-0233	19-296-0225		170	60	
J-442287-	19-296-0232	19-296-0224	200	150	45	160
J-442288-	19-296-0231	19-296-0223		170	60	

MATERIAL:
TYPE (X) STEEL NO GRAPHITE PLUGS.
TYPE (Y) ALUMINUM BRONZE WITH GRAPHITE PLUGS.

ORDERING EXAMPLE:
J-442284 - Y
└ SPECIFY MATERIAL

JOLICO J-B TOOL

PRINTED COPY IS UNCONTROLLED

45° CAM DWELL WEAR PLATES

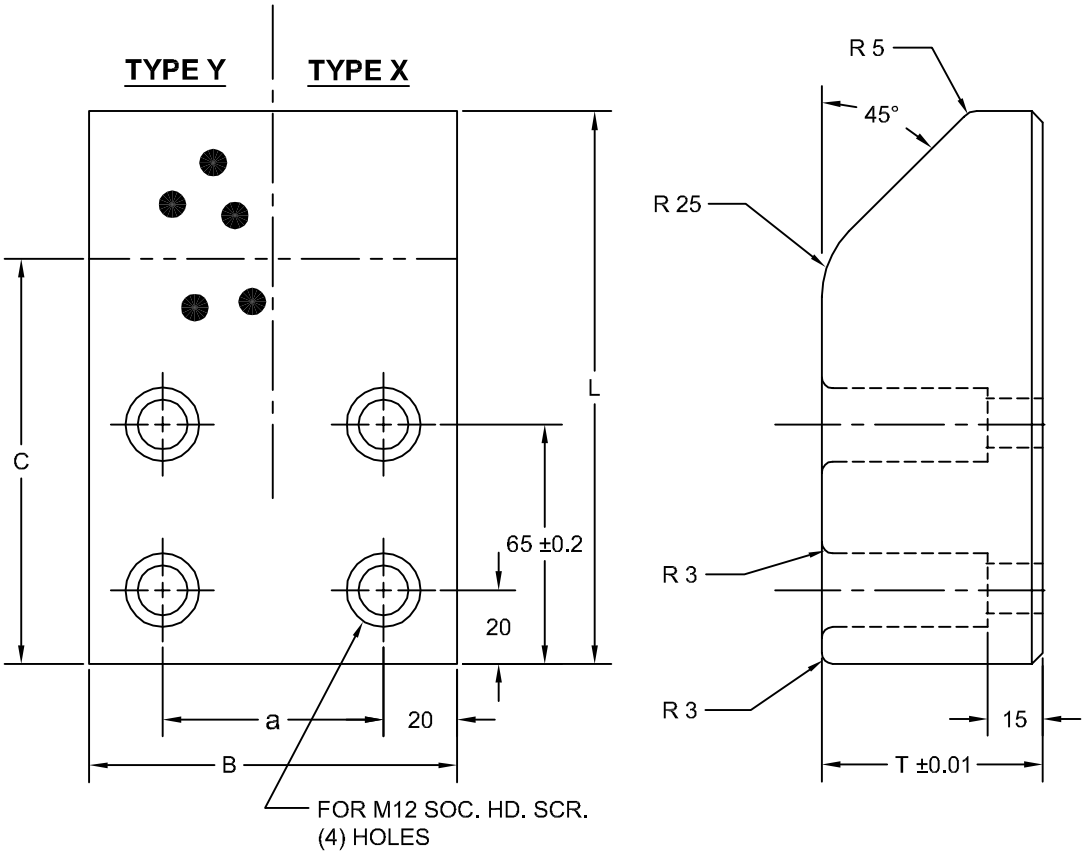

JOLICO NUMBER	COMMODITY CODE						
	TYPE (Y)	TYPE (X)	B	L	T	C	a
J-442400-	19-296-0234	19-296-0240	100	150	45	115	60
J-442401	19-296-0235	19-296-0243		170	60	120	
J-442402-	19-296-0238	19-296-0242	125	150	45	115	85
J-442403-	19-296-0236	19-296-0244		170	60	120	
J-442404-	19-296-0249	19-296-0245	150	150	45	115	110
J-442405-	19-296-0237	19-296-0246		170	60	120	
J-442406-	19-296-0239	19-296-0248	200	150	45	115	160
J-442407-	19-296-0241	19-296-0247		170	60	120	

MATERIAL:
TYPE (X) STEEL NO GRAPHITE PLUGS.
TYPE (Y) ALUMINUM BRONZE WITH GRAPHITE PLUGS.

ORDERING EXAMPLE:
J-442404 - Y
SPECIFY MATERIAL

JOLICO J-B TOOL

PRINTED COPY IS UNCONTROLLED

SHIM PLATE
FOR CAM DWELL WEAR PLATES

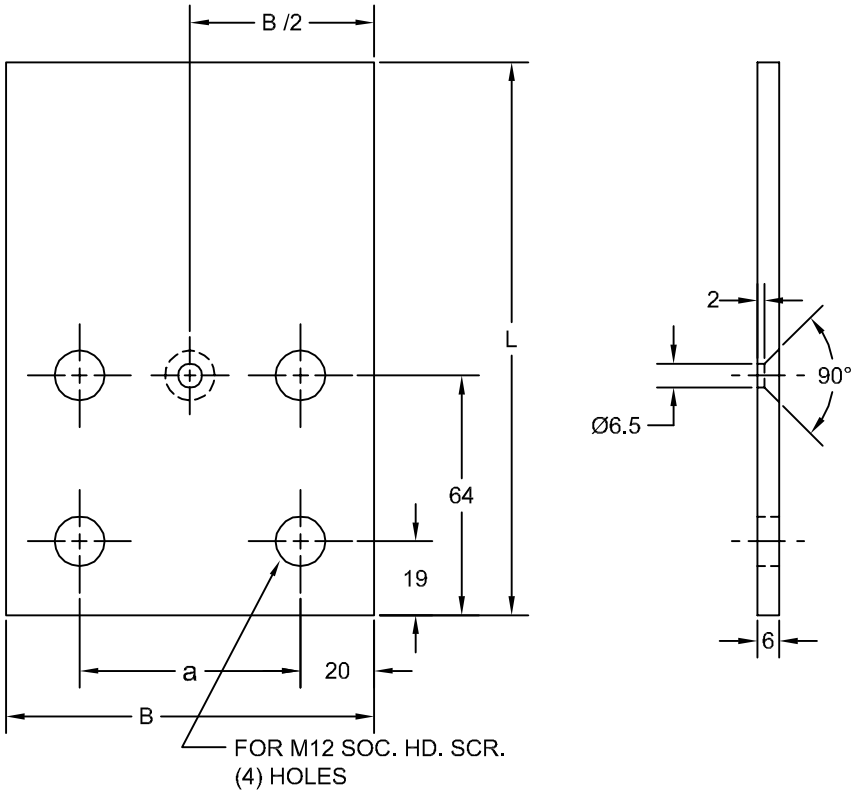

JOLICO NUMBER	COMMODITY CODE	B	L	a
J-442200	57-587-0356	100	148	60
J-442201	57-587-0357		168	
J-442202	57-587-0358	125	148	85
J-442203	57-587-0359		168	
J-442204	57-587-0360	150	148	110
J-442205	57-587-0361		168	
J-442206	57-587-0362	200	148	160
J-442207	57-587-0363		168	

JOLICO J-B TOOL

PRINTED COPY IS UNCONTROLLED

CENTER KEY GUIDE AND CENTER KEY

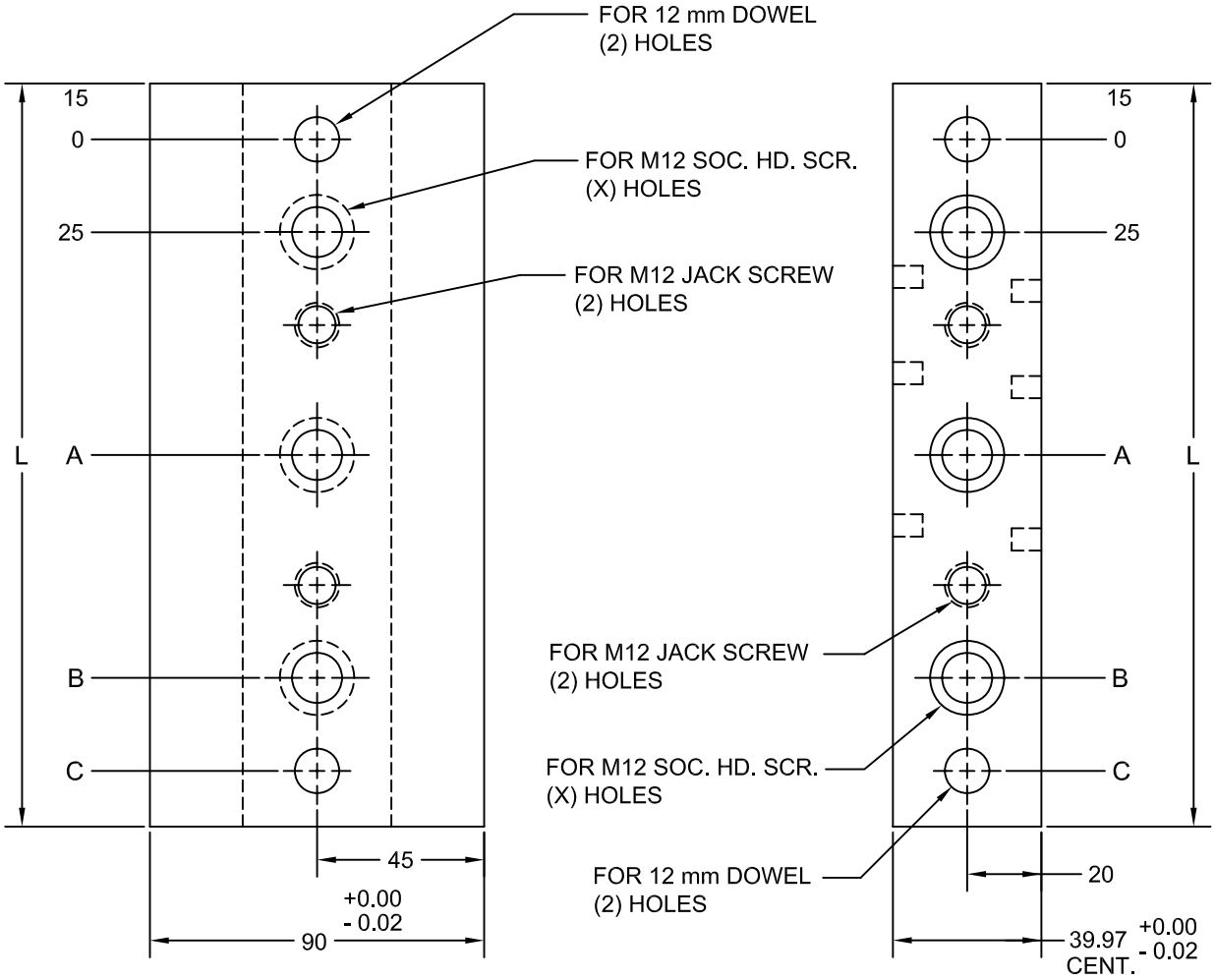

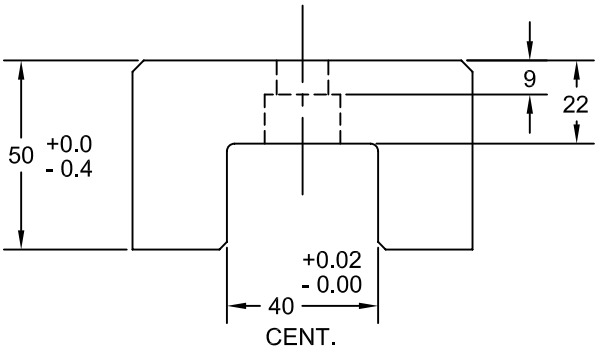

CENTER KEY GUIDE

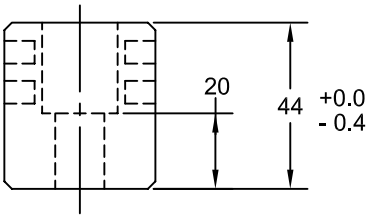

CENTER KEY

TOLERANCE BETWEEN SCREW HOLES ±0.25
TOLERANCE BETWEEN DOWEL HOLES ±0.10

JOLICO NUMBER	CHRYSLER CC NUMBER	NAME	L	X	A	B	C
J-118250	19-010-9008	GUIDE	200	2	—	145	170
J-118251	19-010-9012	GUIDE	300	3	135	245	270
J-118240	19-010-9108	KEY	200	2	—	145	170
J-118241	19-010-9112	KEY	300	3	135	245	270

JOLICO J-B TOOL

PRINTED COPY IS UNCONTROLLED

SELF LUBE CAM GIB

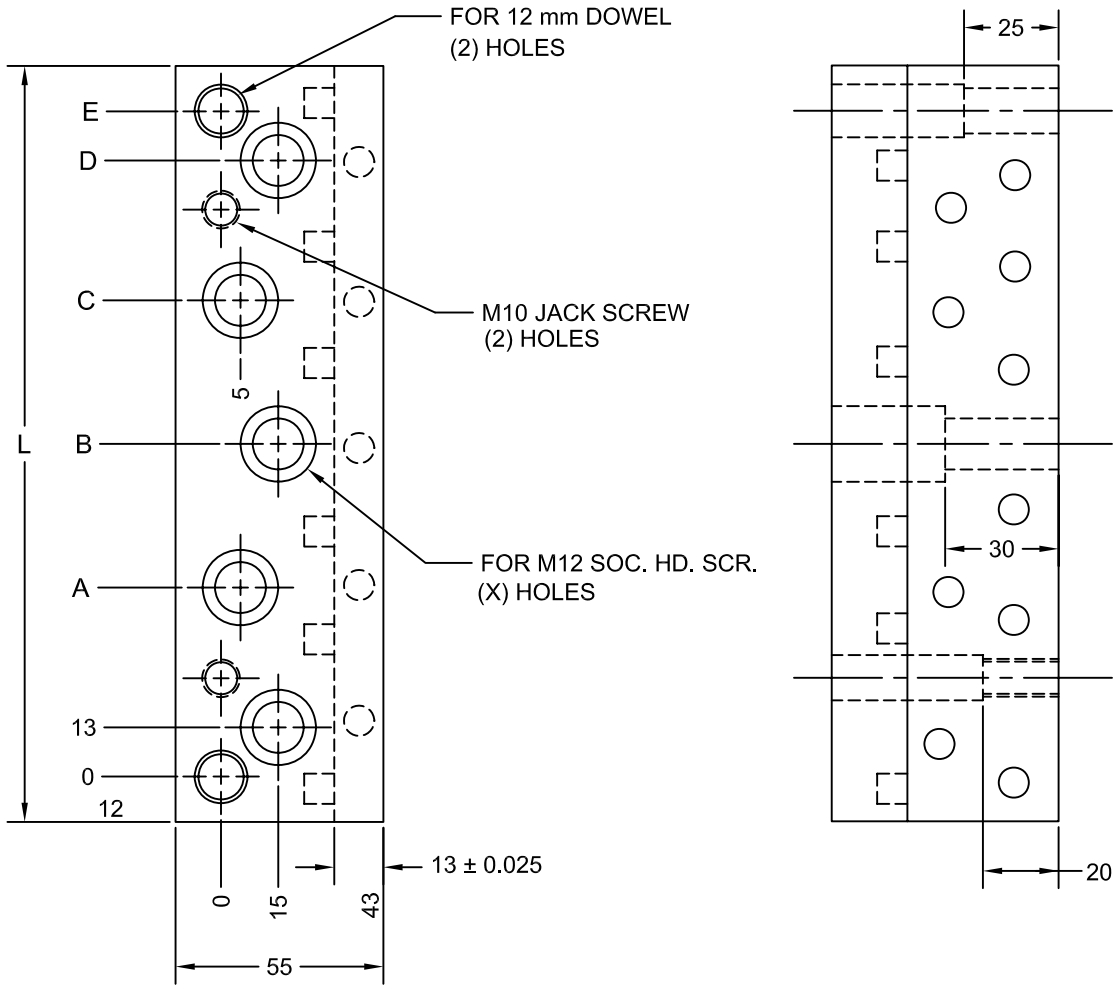

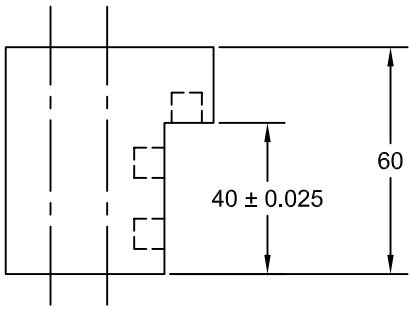

TOLERANCE BETWEEN SCREW HOLES ±0.25
TOLERANCE BETWEEN DOWEL HOLES ±0.10

MATERIAL STEEL WITH GRAPHITE PLUGS

JOLICO NUMBER	CHRYSLER CC NUMBER	L	X	A	B	C	D	E
J - 228782	19 - 010 - 8605	160	3	68	——	——	123	136
J - 228783	19 - 010 - 8610	200	3	88	——	——	163	176
J - 228784	19 - 010 - 8615	250	4	78	——	148	213	226
J - 228785	19 - 010 - 8620	315	5	78	145.5	213	278	291

JOLICO J-B TOOL

PRINTED COPY IS UNCONTROLLED

SELF LUBE CAM GIB BLOCKS 75 mm WIDE

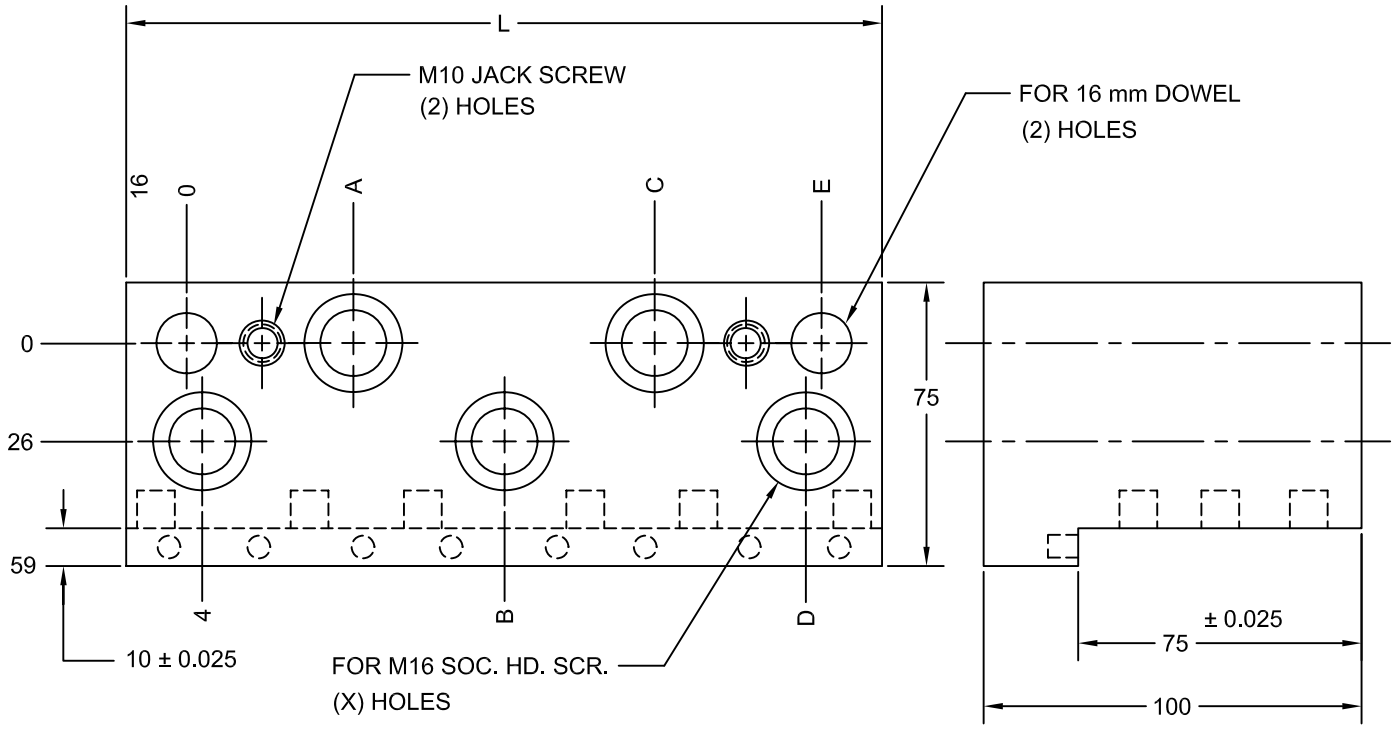

TOLERANCE BETWEEN DOWEL HOLES ±0.10

TOLERANCE BETWEEN SCREW HOLES ±0.25

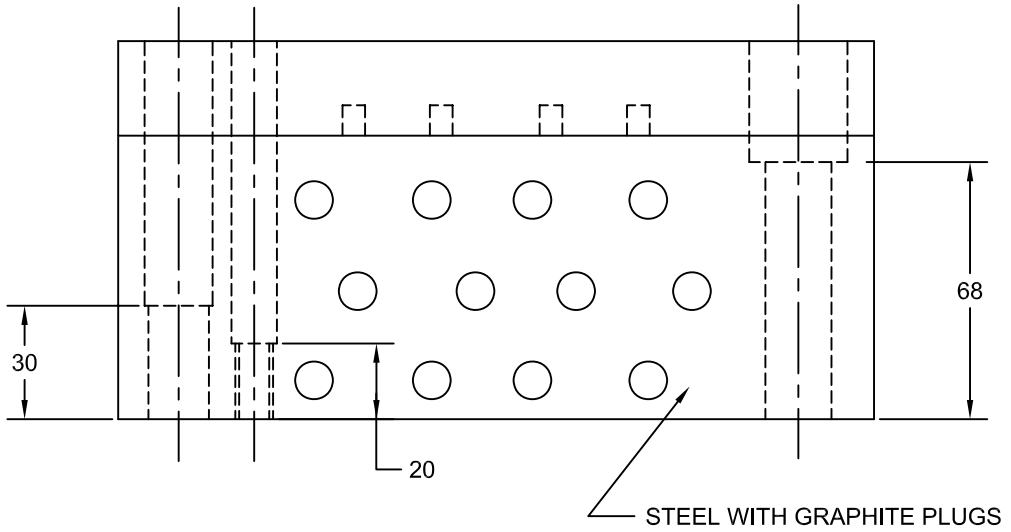

JOLICO NUMBER	CHRYSLER CC NUMBER	L	X HOLES	A	B	C	D	E
J - 337100	19 - 010 - 8655	160	3	--	64	---	124	128
J - 337101	19 - 010 - 8660	200	3	--	84	---	164	168
J - 337102	19 - 010 - 8665	250	4	74	---	144	214	218
J - 337103	19 - 010 - 8670	315	5	74	142	210	279	283

JOLICO J-B TOOL

PRINTED COPY IS UNCONTROLLED

CAM COUPLING PLATE AND COUPLING NUT

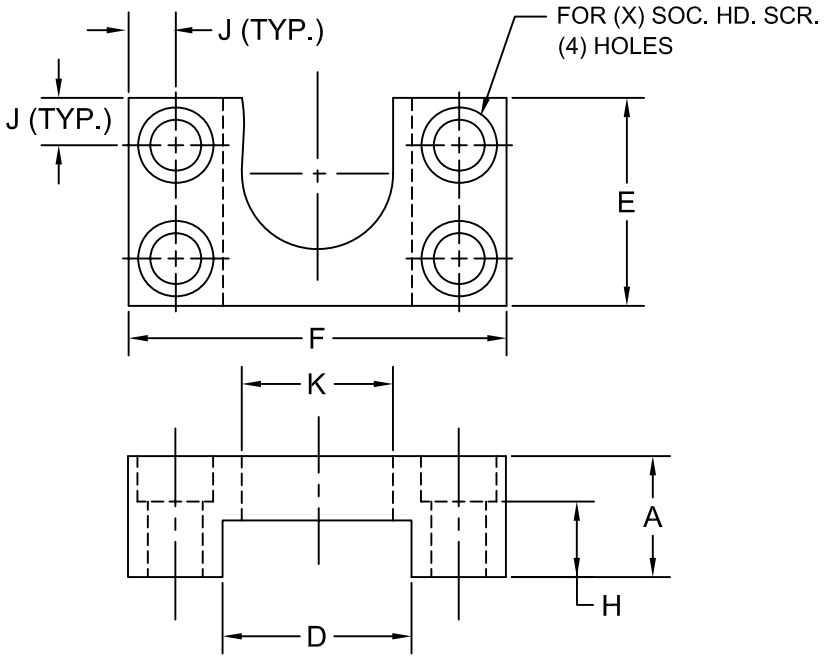

COUPLING PLATE

JOLICO NUMBER	CHRYSLER CC NUMBER	A	D	E	F	H	J	X	K
J - 779620	19 - 010 - 2360	25	38	50	80	15	11.5	M10	28
J - 779621	19 - 010 - 2365	32	50	55	100	20	12.5	M12	40
J - 779622	19 - 010 - 2370	40	60	65	120	24	16.0	M16	50
J - 779623	19 - 010 - 2375	45	80	100	150	19	18.0	M20	66

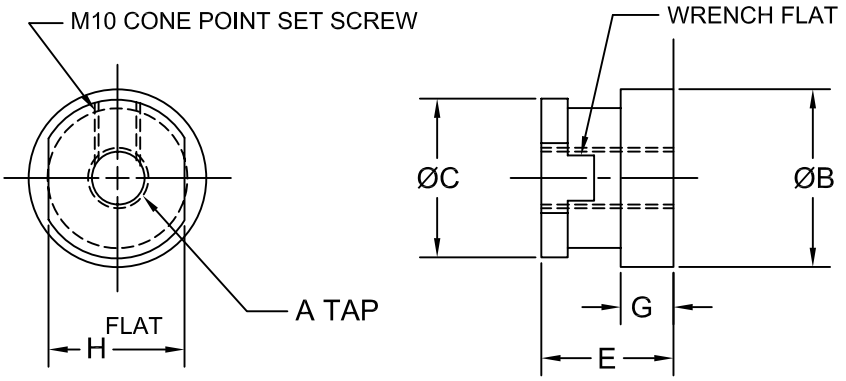

COUPLING NUT

CYLINDER BORE SIZE	JOLICO NUMBER	CHRYSLER CC NUMBER	A TAP	B	C	F	G	H	USE WITH COUPLING PLATE
32	J - 779630	19 - 010 - 2305	M10 X 1.25	35	30	16	10	24	J - 779620
40	J - 779631	19 - 010 - 2310	M12 X 1.25						
50-63	J - 779632	19 - 010 - 2315	M16 X 1.5	47	42	19	14	36	J - 779621
80-100	J - 779633	19 - 010 - 2320	M20 X 1.5						
125	J - 779634	19 - 010 - 2325	M27 X 2.0	57	52	24	19	46	J - 779622
160-200	J - 779635	19 - 010 - 2330	M36 X 2.0						
250	J - 779636	19 - 010 - 2335	M42 X 2.0	76	64	50	19	60	J - 779623

JOLICO J-B TOOL

PRINTED COPY IS UNCONTROLLED

CAM RETURN CUSHION AND STOP WITH VERTICAL MOUNTING SCREWS

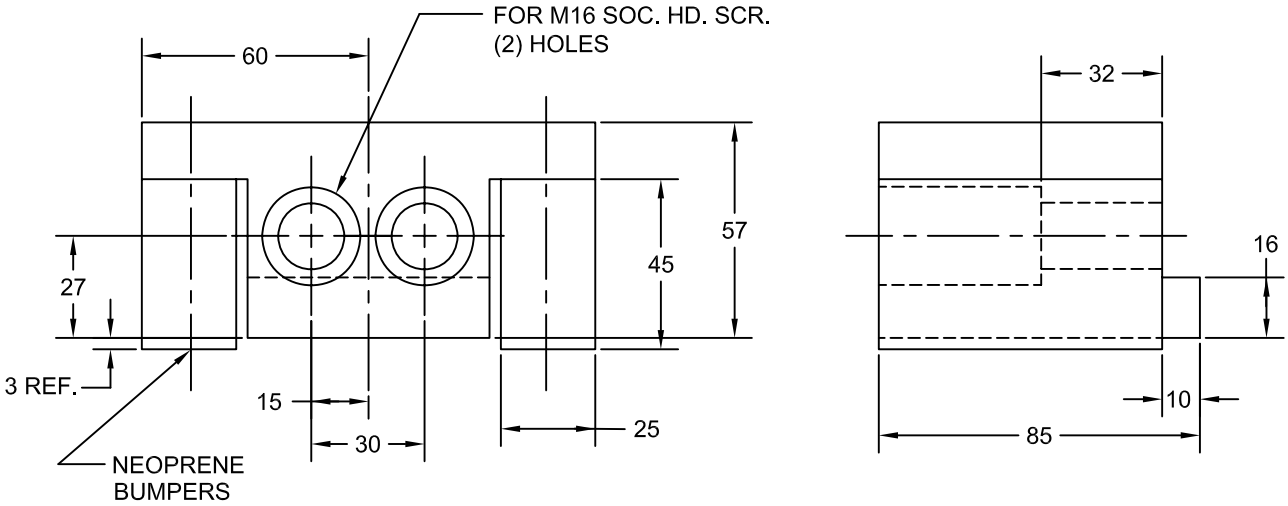

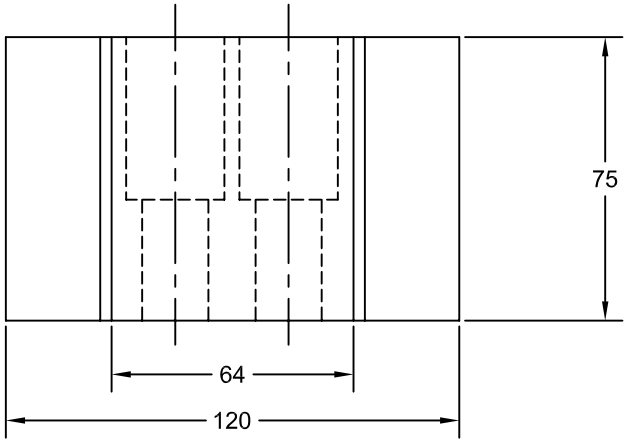

WITH LOCK STEP	
JOLICO NUMBER	CHRYSLER CC NUMBER
J-228731	19-010-2205

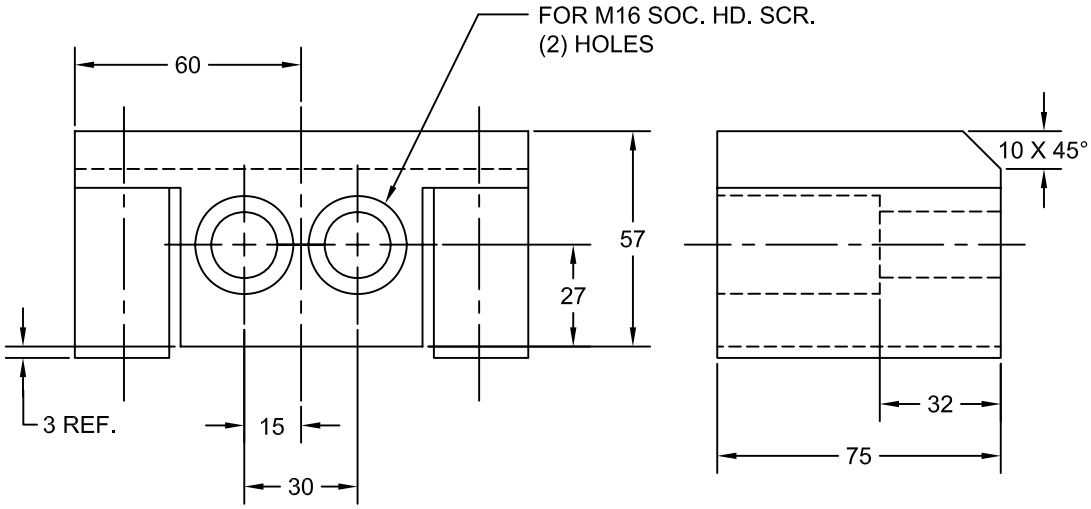

WITHOUT LOCK STEP		BUMMPER ONLY	
JOLICO NUMBER	CHRYSLER CC NUMBER	JOLICO NUMBER	CHRYSLER CC NUMBER
J-228732	19-010-2210	J-228732-B	19-010-2250

JOLICO J-B TOOL

PRINTED COPY IS UNCONTROLLED

CAM RETUTM CUSHION AND STOP WITH HORIZONTAL MOUNTING SCREWS

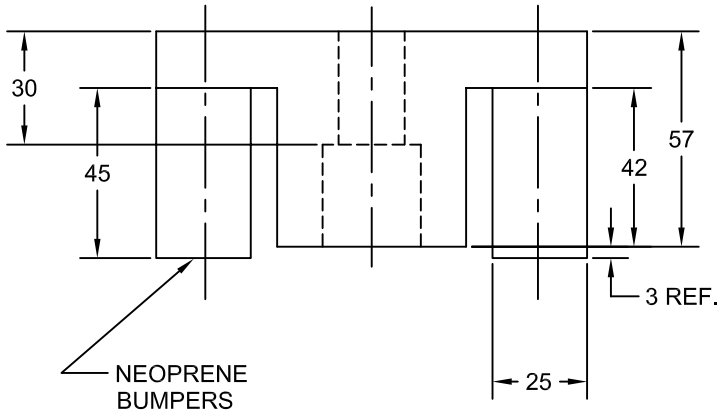

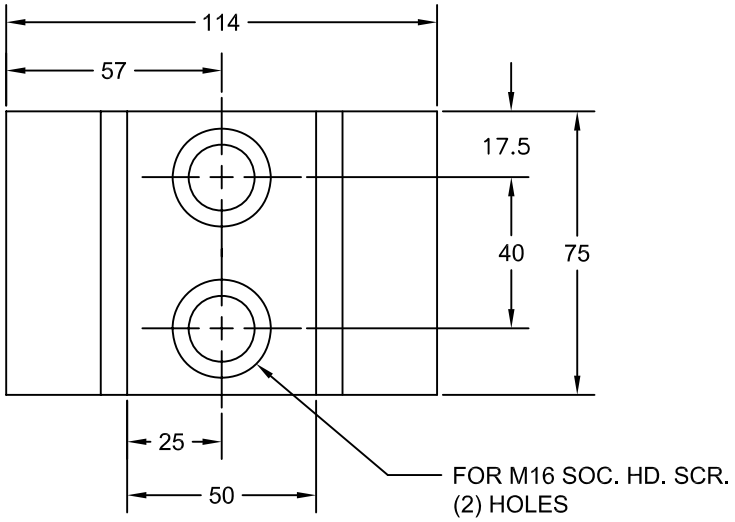

JOLICO NUMBER	CHRYSLER CC NUMBER
J-228721	19-010-2215

JOLICO J-B TOOL

PRINTED COPY IS UNCONTROLLED

CAM BUFFER

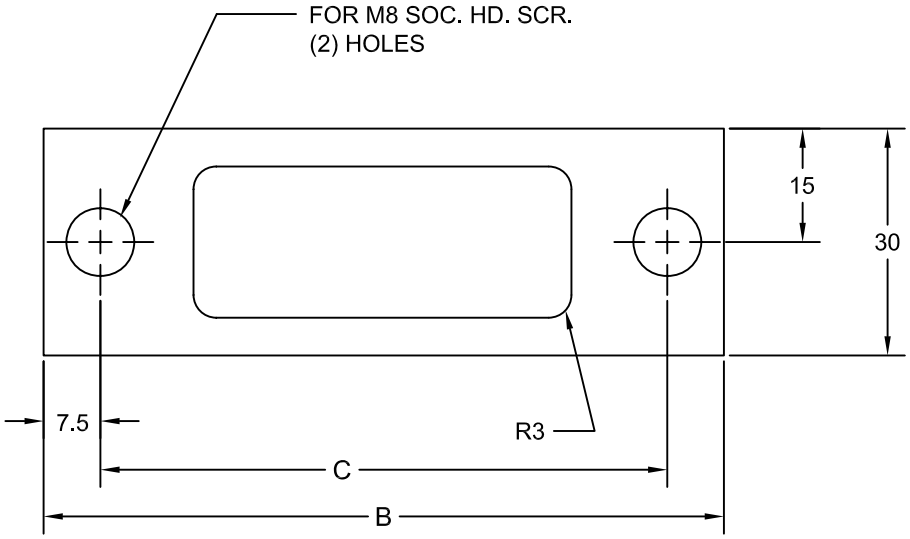

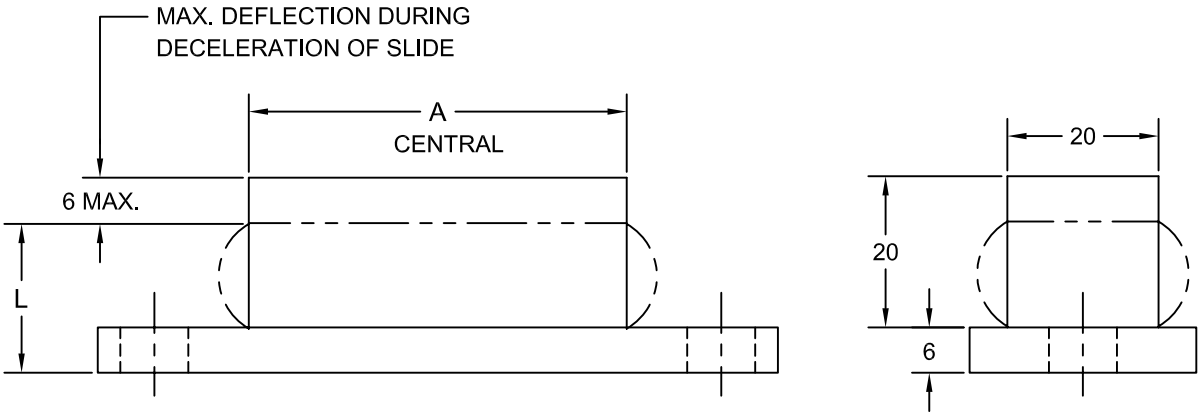

JOLICO NUMBER	CHRYSLER CC NUMBER	A	B	C	FORCE FOR LENGTH (L)
J-228719	19-010-2255	50	90	75	250 LBS
J-228720	19-010-2260	100	140	125	500 LBS

JOLICO J-B TOOL

PRINTED COPY IS UNCONTROLLED

URETHANE BUMPER WITH STEEL PLATE

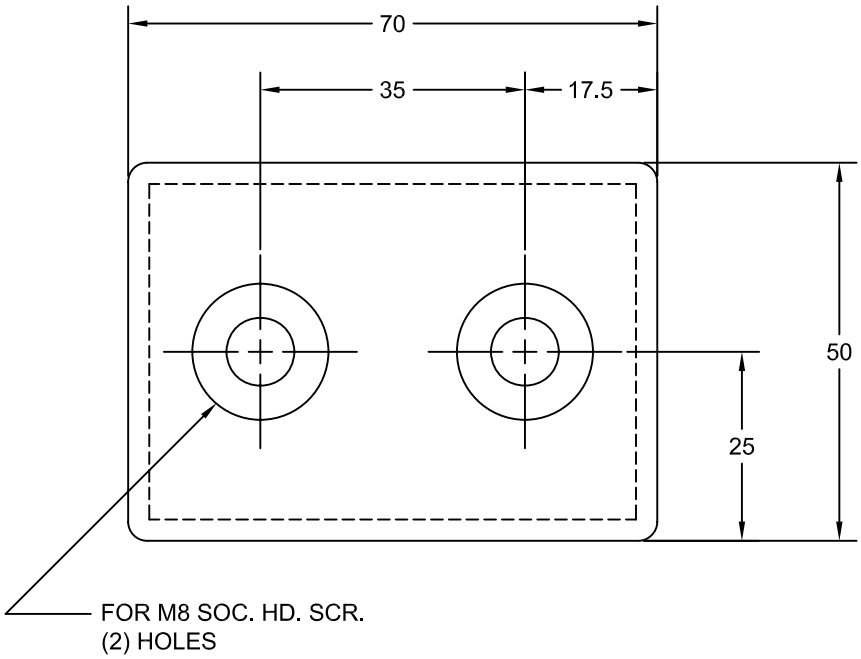

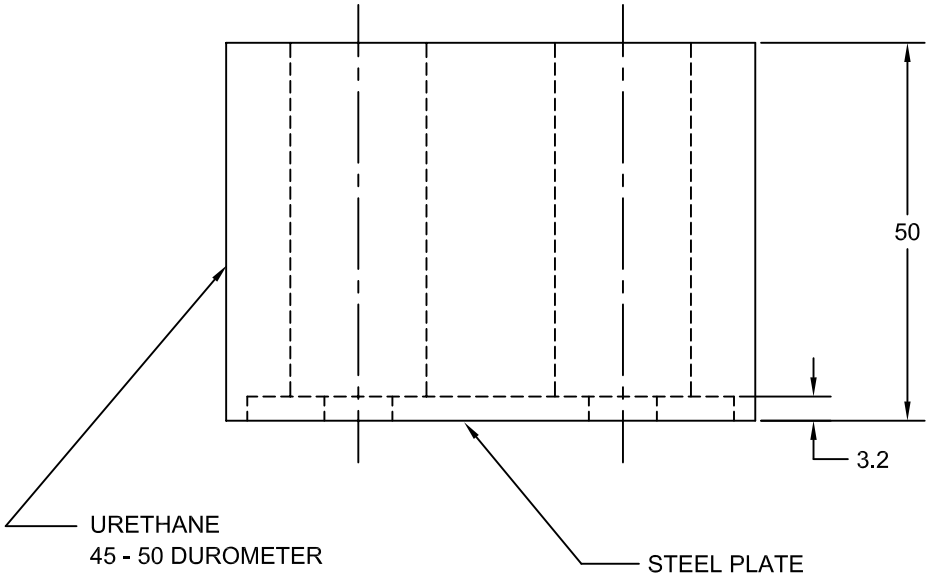

JOLICO NUMBER	CHRYSLER CC NUMBER
J-228730	19-010-2240

JOLICO J-B TOOL

PRINTED COPY IS UNCONTROLLED

SLIDE RETURN BRACKET

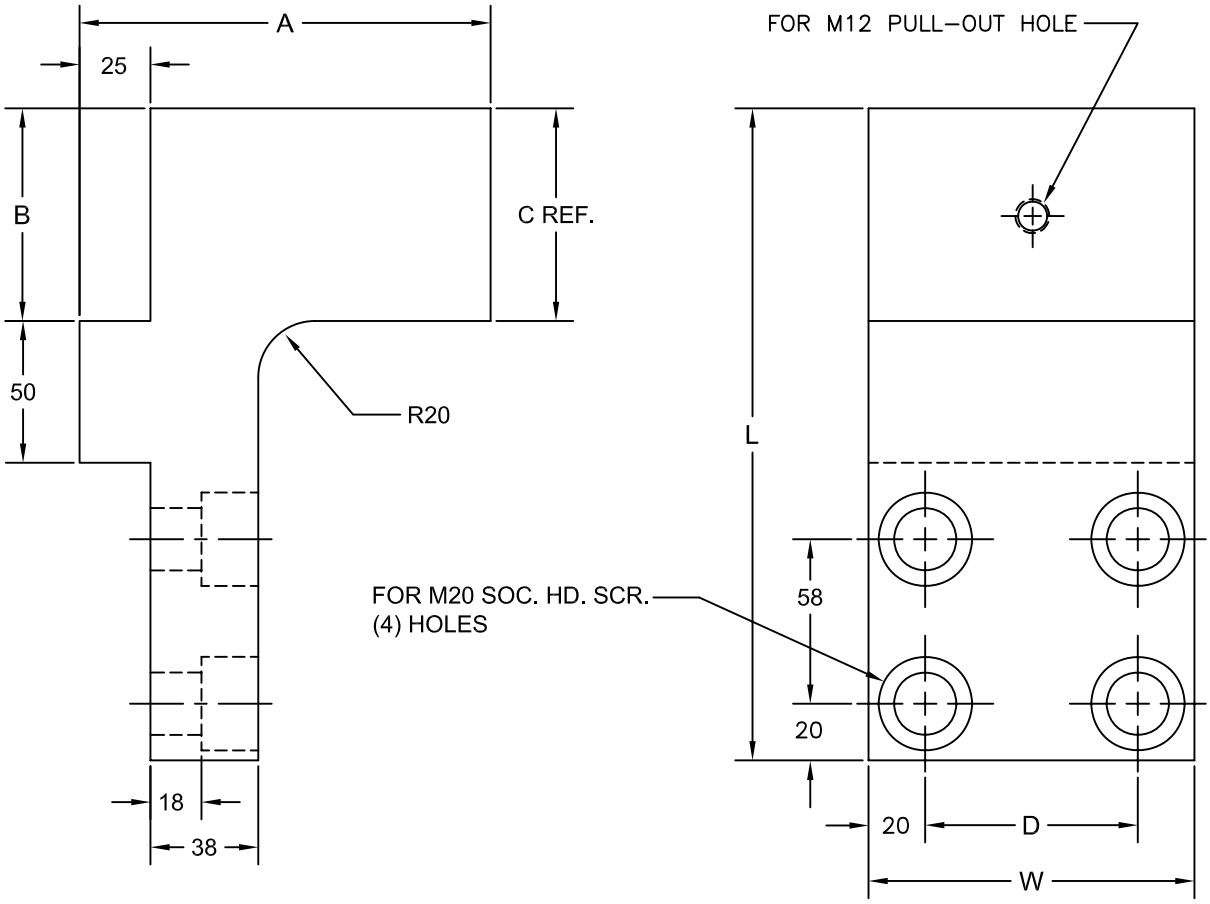

JOLICO NUMBER	CHRYSLER CC NUMBER	L	W	A	B	C	D
J-228762	19-010-1114	215	100	145	65	65	60
J-228763	19-010-1116	230	115	165	75	75	75
J-228764	19-010-1118	230	115	185	75	75	75

JOLICO J-B TOOL

PRINTED COPY IS UNCONTROLLED

LOCATING CONE ASSEMBLY

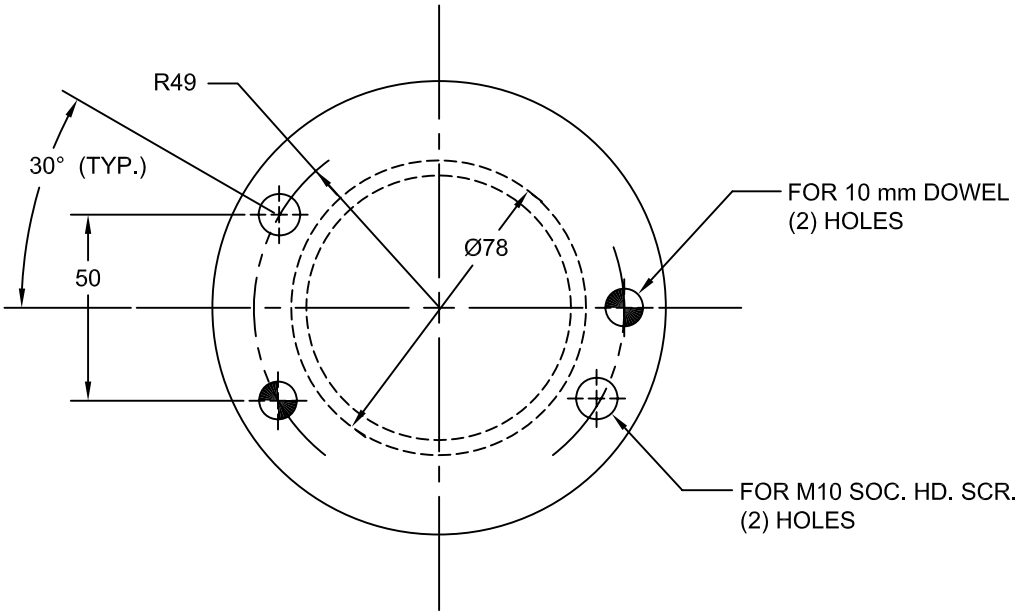

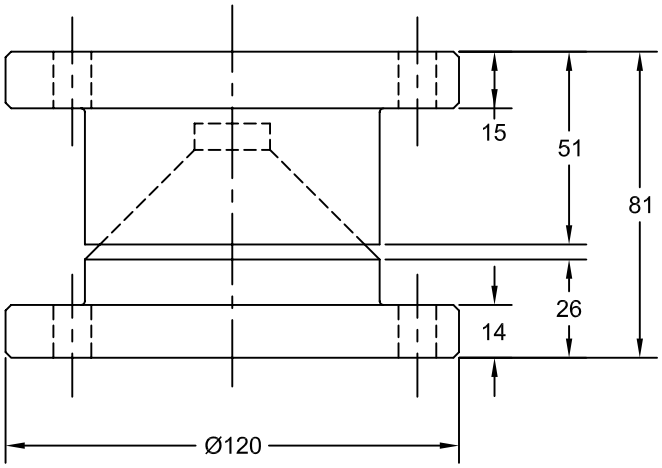

JOLICO NUMBER	CHRYSLER CC NUMBER
J-223208	19-010-9250

JOLICO J-B TOOL

PRINTED COPY IS UNCONTROLLED

POSITIVE RETURN DRIVER PLATES

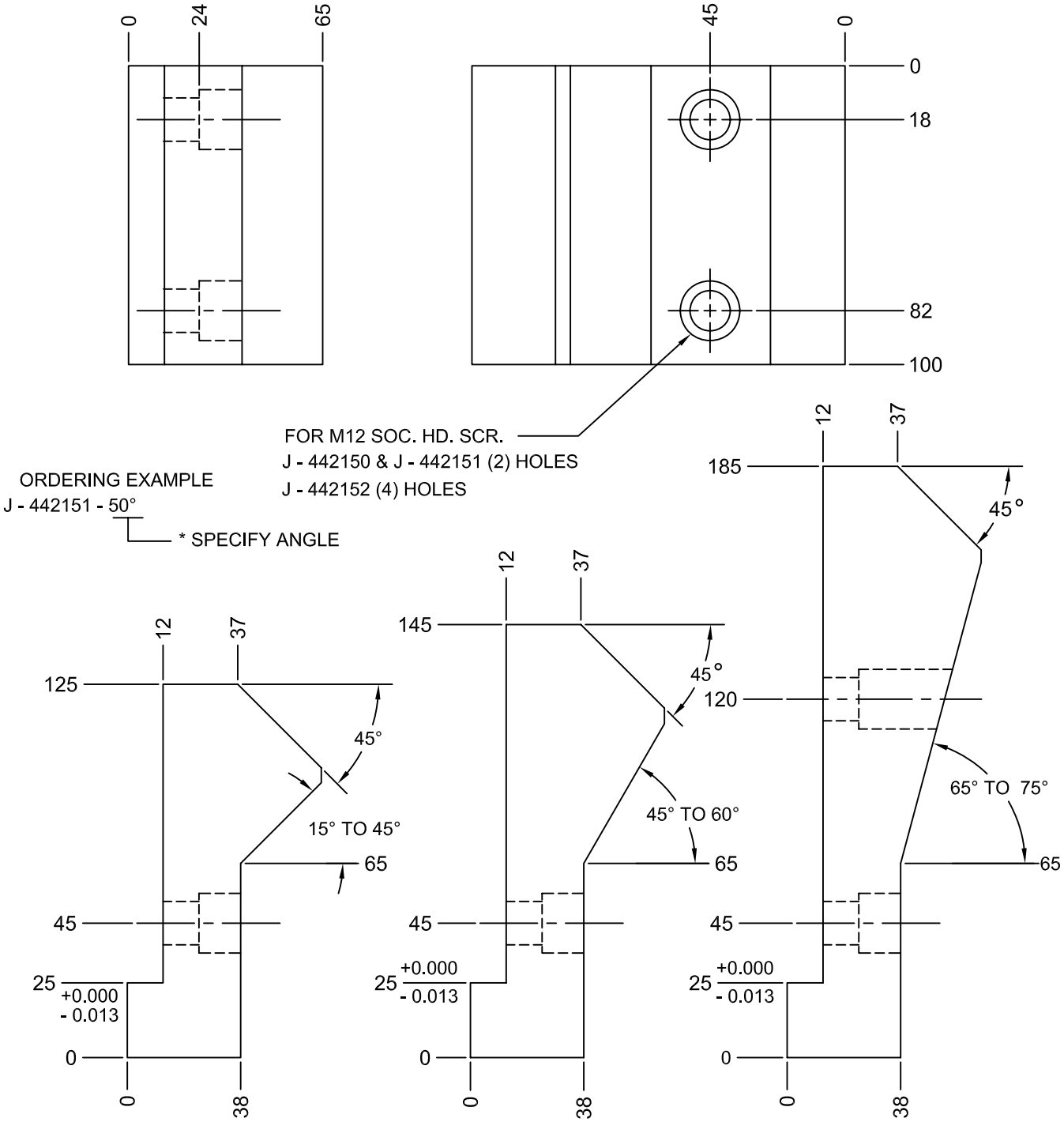

JOLICO NO.	J-442150- _ _ °	ANGLE
CHRYSLER CODE NUMBER	19-010-0115	15
	19-010-0120	20
	19-010-0125	25
	19-010-0130	30
	19-010-0135	35
	19-010-0140	40
	19-010-0145	45

JOLICO NO.	J-442151- _ _ °	ANGLE
CHRYSLER CODE NUMBER	19-010-0245	45
	19-010-0250	50
	19-010-0255	55
	19-010-0260	60

JOLICO NO.	J-442152- _ _ °	ANGLE
CHRYSLER CODE NUMBER	19-010-0365	65
	19-010-0370	70
	19-010-0375	75

JOLICO J-B TOOL

PRINTED COPY IS UNCONTROLLED

POSITIVE RETURN WEAR PLATES

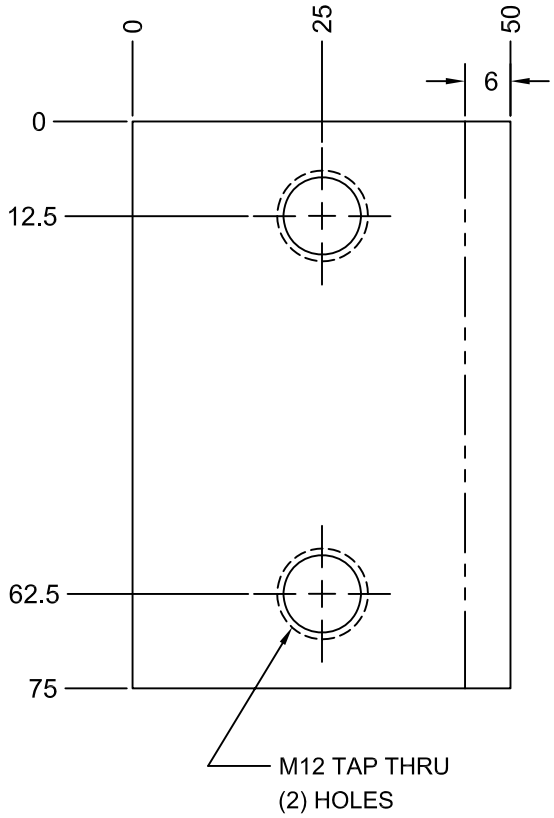

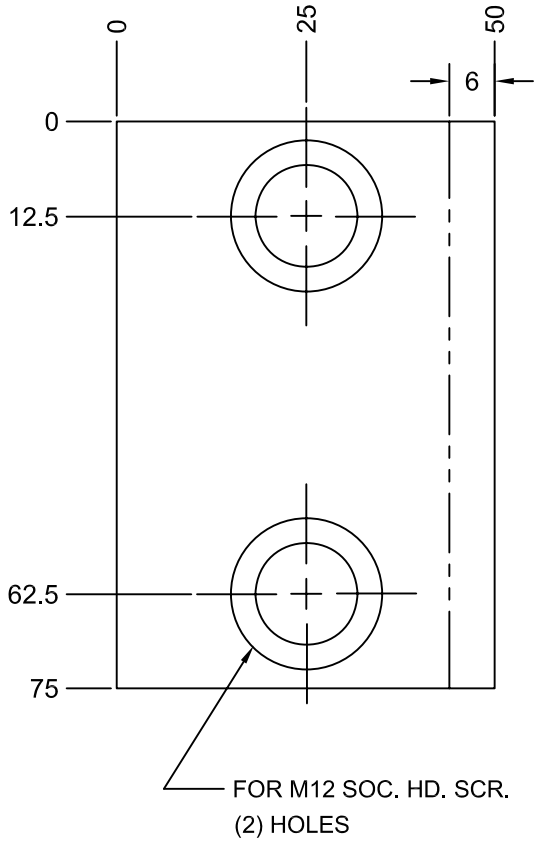

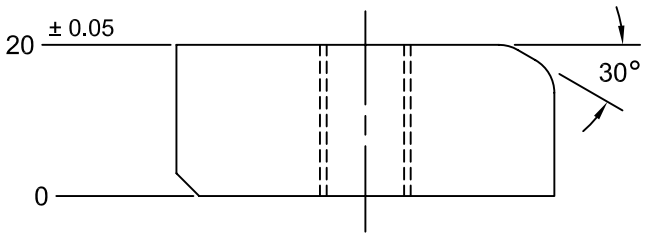

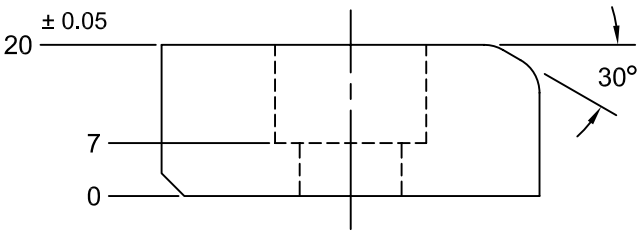

JOLICO NUMBER	CHRYSLER CC NUMBER
J-442153	19-296-4000

JOLICO NUMBER	CHRYSLER CC NUMBER
J-442154	19-296-4001

JOLICO J-B TOOL

PRINTED COPY IS UNCONTROLLED

CENTER GIB PLATE

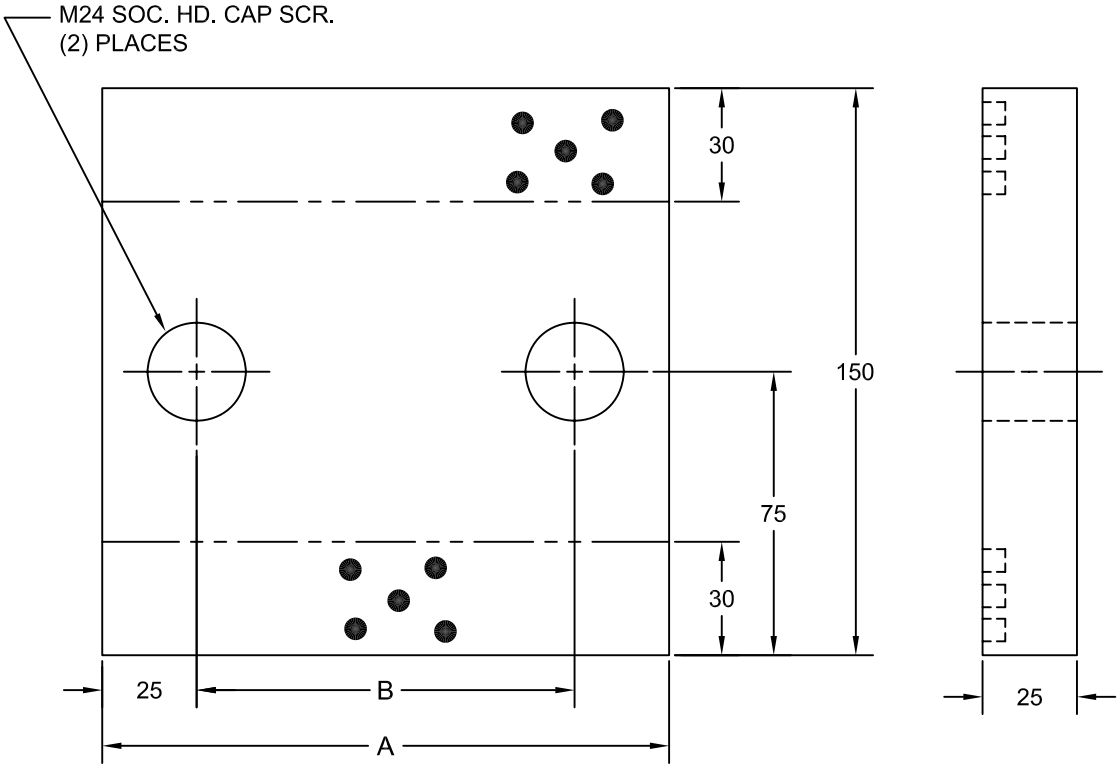

TOLERANCE BETWEEN SCREW HOLES ± 0.12

JOLICO NUMBER	CHRYSLER CODE NUMBER	A	B
J - 444380	19-010-8515	150	100
J - 444381	19-010-8520	200	150
J - 444382	19-010-8525	250	200

JOLICO J-B TOOL

PRINTED COPY IS UNCONTROLLED

RETAINER PLATE

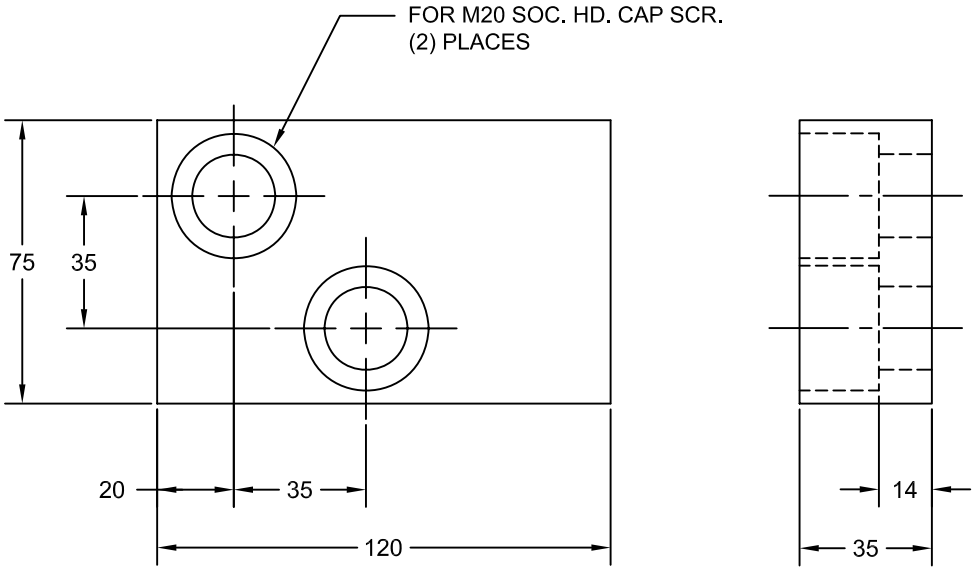

JOLICO NUMBER	CHRYSLER CC NUMBER
J-449149	19-010-0046

JOLICO J-B TOOL

PRINTED COPY IS UNCONTROLLED

CAM ACCELERATOR ROLLER

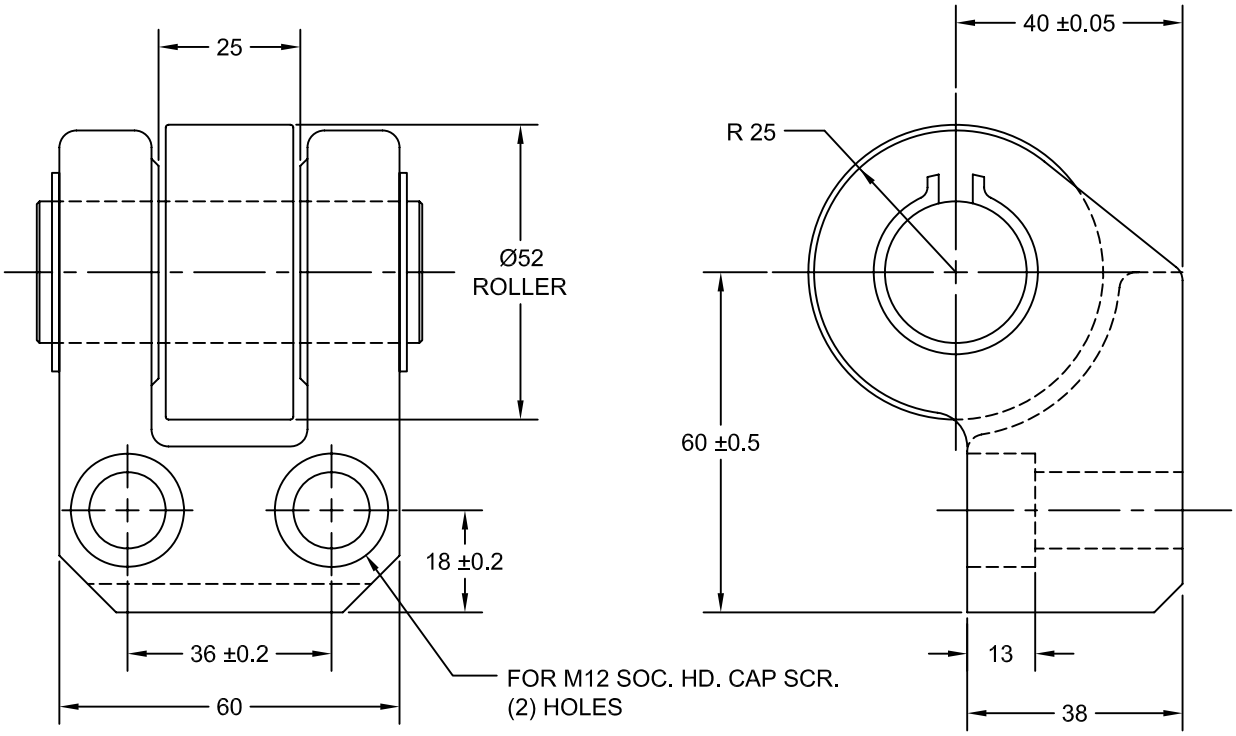

JOLICO NUMBER	CHRYSLER CC NUMBER
J - 552090	19-205-4660

JOLICO J-B TOOL

ROTARY CAM SLIDE PLATES 75 mm WIDE

PRINTED COPY IS UNCONTROLLED

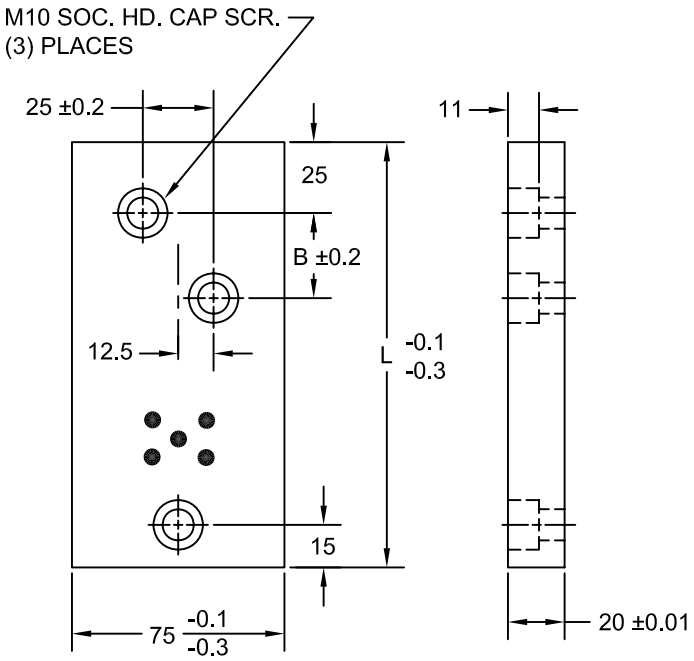

JOLICO NUMBER	CHRYSLER CC NUMBER	L	B
J-810800	19-296-9500	150	20
J-810801	19-296-9501	150	25
J-810802	19-296-9502	150	30
J-810803	19-296-9503	150	40
J-810804	19-296-9504	175	30
J-810805	19-296-9505	175	55
J-810806	19-296-9506	185	40
J-810807	19-296-9507	190	50
J-810808	19-296-9508	200	40
J-810809	19-296-9509	200	50
J-810810	19-296-9510	200	60
J-810811	19-296-9511	200	80
J-810812	19-296-9512	210	80
J-810813	19-296-9513	220	40

JOLICO NUMBER	CHRYSLER CC NUMBER	L	B
J-810814	19-296-9514	230	50
J-810815	19-296-9515	235	50
J-810816	19-296-9516	235	55
J-810817	19-296-9517	235	80
J-810818	19-296-9518	245	65
J-810819	19-296-9519	260	35
J-810820	19-296-9520	260	45
J-810821	19-296-9521	260	55
J-810822	19-296-9522	260	65
J-810823	19-296-9523	260	80
J-810824	19-296-9524	285	50
J-810825	19-296-9525	300	50
J-810826	19-296-9526	330	80

JOLICO J-B TOOL

ROTARY CAM SLIDE PLATES 100 mm WIDE

PRINTED COPY IS UNCONTROLLED

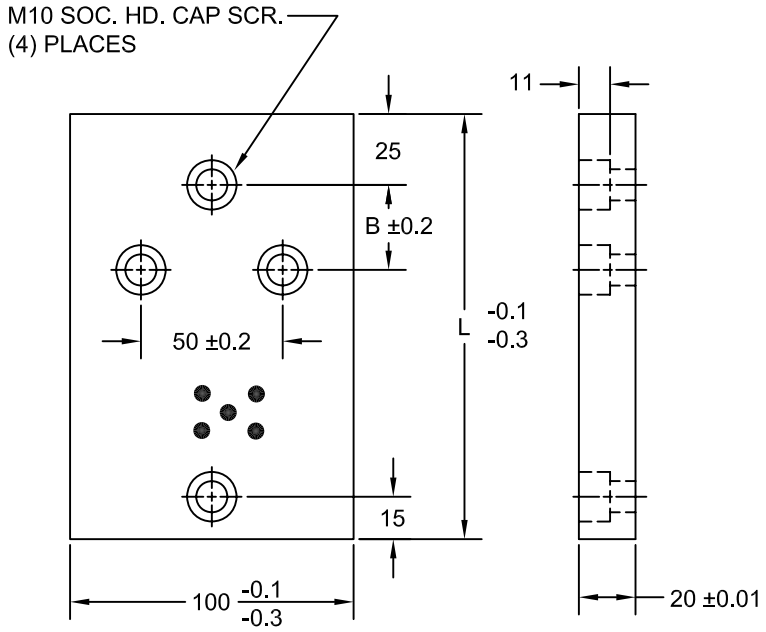

JOLICO NUMBER	CHRYSLER CC NUMBER	L	B
J-810827	19-296-9600	125	40
J-810828	19-296-9601	125	55
J-810829	19-296-9602	150	30
J-810830	19-296-9603	150	40
J-810831	19-296-9604	150	50
J-810832	19-296-9605	150	55
J-810833	19-296-9606	175	40
J-810834	19-296-9607	175	55
J-810835	19-296-9608	175	80
J-810836	19-296-9609	190	50
J-810837	19-296-9610	200	35
J-810838	19-296-9611	200	40
J-810839	19-296-9612	200	50
J-810840	19-296-9613	200	55
J-810841	19-296-9614	200	65
J-810842	19-296-9615	200	80

JOLICO NUMBER	CHRYSLER CC NUMBER	L	B
J-810843	19-296-9616	220	40
J-810844	19-296-9617	220	55
J-810845	19-296-9618	235	50
J-810846	19-296-9619	235	55
J-810847	19-296-9620	235	65
J-810848	19-296-9621	235	80
J-810849	19-296-9622	260	30
J-810850	19-296-9623	260	55
J-810851	19-296-9624	260	65
J-810852	19-296-9625	260	80
J-810853	19-296-9626	270	80
J-810854	19-296-9627	275	50
J-810855	19-296-9628	275	65
J-810856	19-296-9629	275	80
J-810857	19-296-9630	290	55
J-810858	19-296-9631	320	65
J-810859	19-296-9633	360	50
J-810860	19-296-9632	360	80

JOLICO J-B TOOL

ROTARY CAM SLIDE PLATES 125 mm WIDE

PRINTED COPY IS UNCONTROLLED

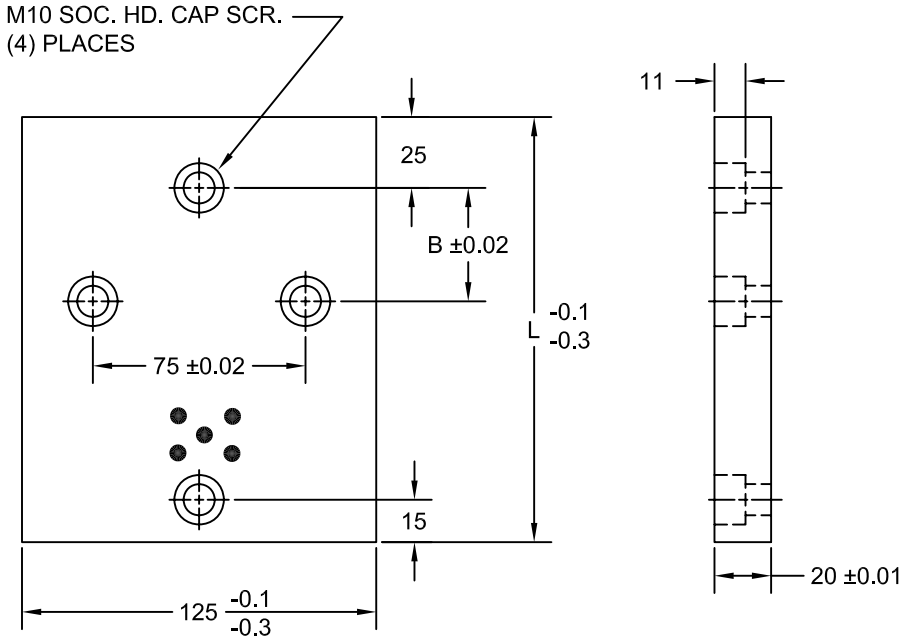

JOLICO NUMBER	CHRYSLER CC NUMBER	L	B
J-810861	19-296-9700	125	25
J-810862	19-296-9701	150	40
J-810863	19-296-9702	150	50
J-810864	19-296-9703	175	35
J-810865	19-296-9704	175	55
J-810866	19-296-9705	200	35
J-810867	19-296-9706	200	40
J-810868	19-296-9707	200	55
J-810869	19-296-9708	200	70
J-810870	19-296-9709	200	80
J-810871	19-296-9710	220	30
J-810872	19-296-9711	220	40
J-810873	19-296-9712	220	50
J-810874	19-296-9713	220	80
J-810875	19-296-9714	225	40
J-810876	19-296-9715	225	55
J-810877	19-296-9716	225	65

JOLICO NUMBER	CHRYSLER CC NUMBER	L	B
J-810878	19-296-9717	230	50
J-810879	19-296-9718	235	40
J-810880	19-296-9719	235	50
J-810881	19-296-9731	235	55
J-810882	19-296-9720	235	60
J-810883	19-296-9721	235	75
J-810884	19-296-9722	260	55
J-810885	19-296-9723	260	60
J-810886	19-296-9724	260	65
J-810887	19-296-9725	260	80
J-810888	19-296-9726	275	65
J-810889	19-296-9727	275	80
J-810890	19-296-9728	320	65
J-810891	19-296-9729	360	65
J-810892	19-296-9730	400	80

JOLICO J-B TOOL

PRINTED COPY IS UNCONTROLLED

SOLID AND ADJUSTABLE SIDE GUIDES

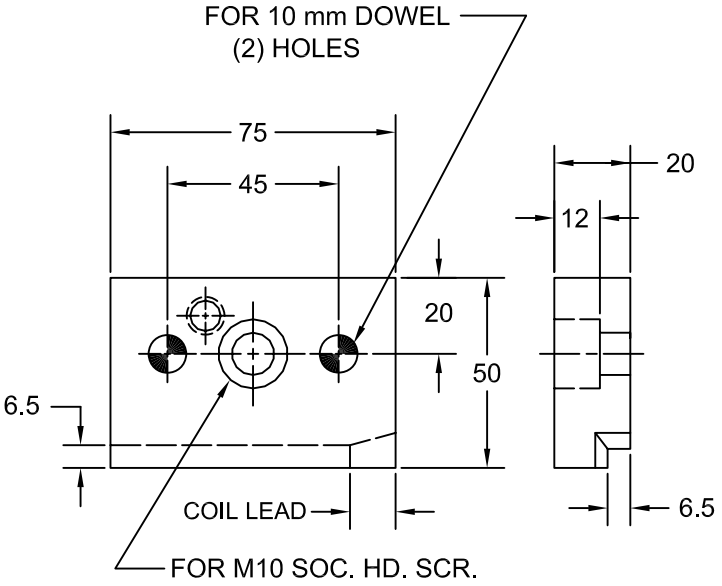

SOLID SIDE GUIDE

JOLICO NUMBER	CHRYSLER CC NUMBER
J-550112	19-235-4201

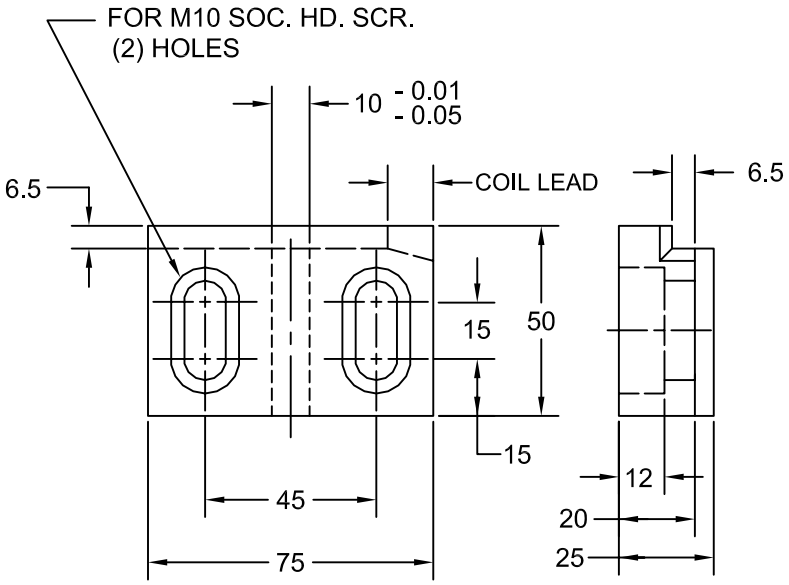

ADJUSTABLE SIDE GUIDE

JOLICO NUMBER	CHRYSLER CC NUMBER
J-550103	19-235-4205

JOLICO J-B TOOL

PRINTED COPY IS UNCONTROLLED

COIL LIFTER FOR SINGLE UNIT

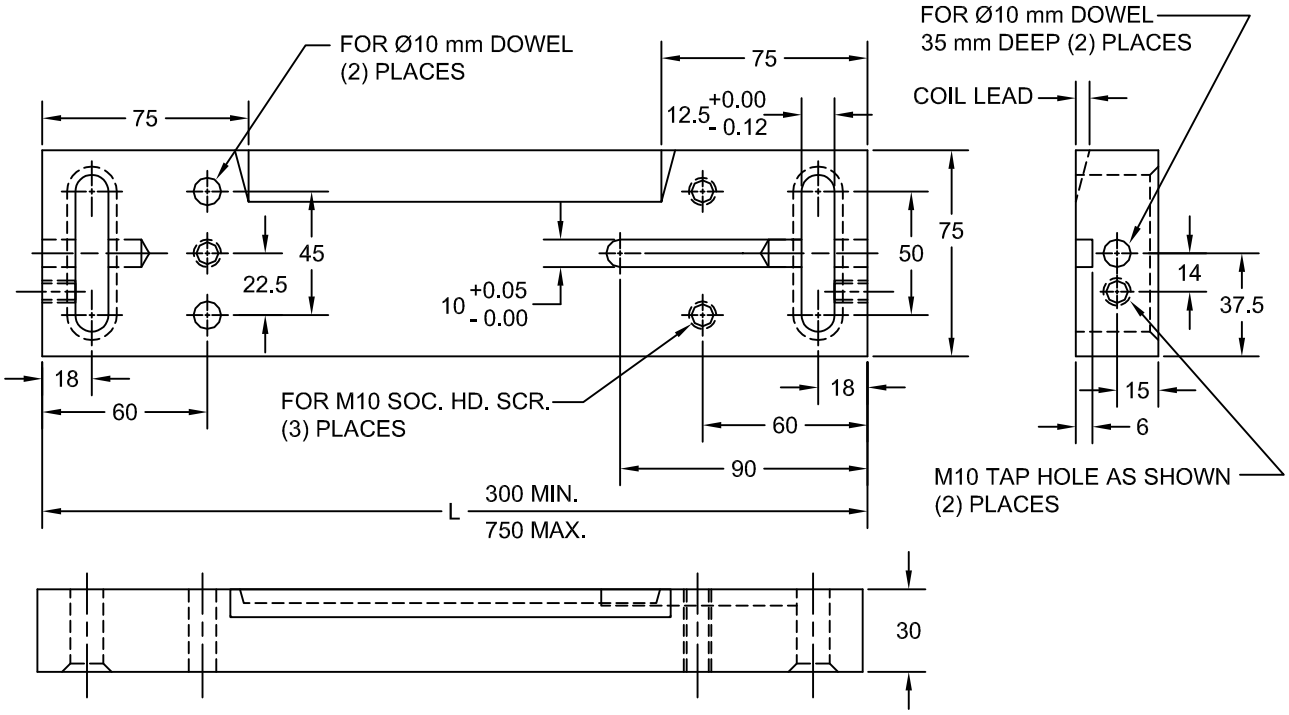

JOLICO NUMBER	CHRYSLER CC NUMBER	L
J-550610-300	19-235-4300	300
J-550610-310	19-235-4310	310
J-550610-320	19-235-4320	320
J-550610-330	19-235-4330	330
J-550610-340	19-235-4340	340
J-550610-350	19-235-4350	350
J-550610-360	19-235-4360	360
J-550610-370	19-235-4370	370
J-550610-380	19-235-4380	380
J-550610-390	19-235-4390	390
J-550610-400	19-235-4400	400
J-550610-410	19-235-4410	410
J-550610-420	19-235-4420	420
J-550610-430	19-235-4430	430
J-550610-440	19-235-4440	440
J-550610-450	19-235-4450	450
J-550610-460	19-235-4460	460
J-550610-470	19-235-4470	470
J-550610-480	19-235-4480	480
J-550610-490	19-235-4490	490
J-550610-500	19-235-4500	500
J-550610-510	19-235-4510	510
J-550610-520	19-235-4520	520

JOLICO NUMBER	CHRYSLER CC NUMBER	L
J-550610-530	19-235-4530	530
J-550610-540	19-235-4540	540
J-550610-550	19-235-4550	550
J-550610-560	19-235-4560	560
J-550610-570	19-235-4570	570
J-550610-580	19-235-4580	580
J-550610-590	19-235-4590	590
J-550610-600	19-235-4600	600
J-550610-610	19-235-4610	610
J-550610-620	19-235-4620	620
J-550610-630	19-235-4630	630
J-550610-640	19-235-4640	640
J-550610-650	19-235-4650	650
J-550610-660	19-235-4660	660
J-550610-670	19-235-4670	670
J-550610-680	19-235-4680	680
J-550610-690	19-235-4690	690
J-550610-700	19-235-4700	700
J-550610-710	19-235-4710	710
J-550610-720	19-235-4720	720
J-550610-730	19-235-4730	730
J-550610-740	19-235-4740	740
J-550610-750	19-235-4750	750

JOLICO J-B TOOL

PRINTED COPY IS UNCONTROLLED

COIL LIFTER FOR ADJUSTABLE AND SOLID SIDE GIDE

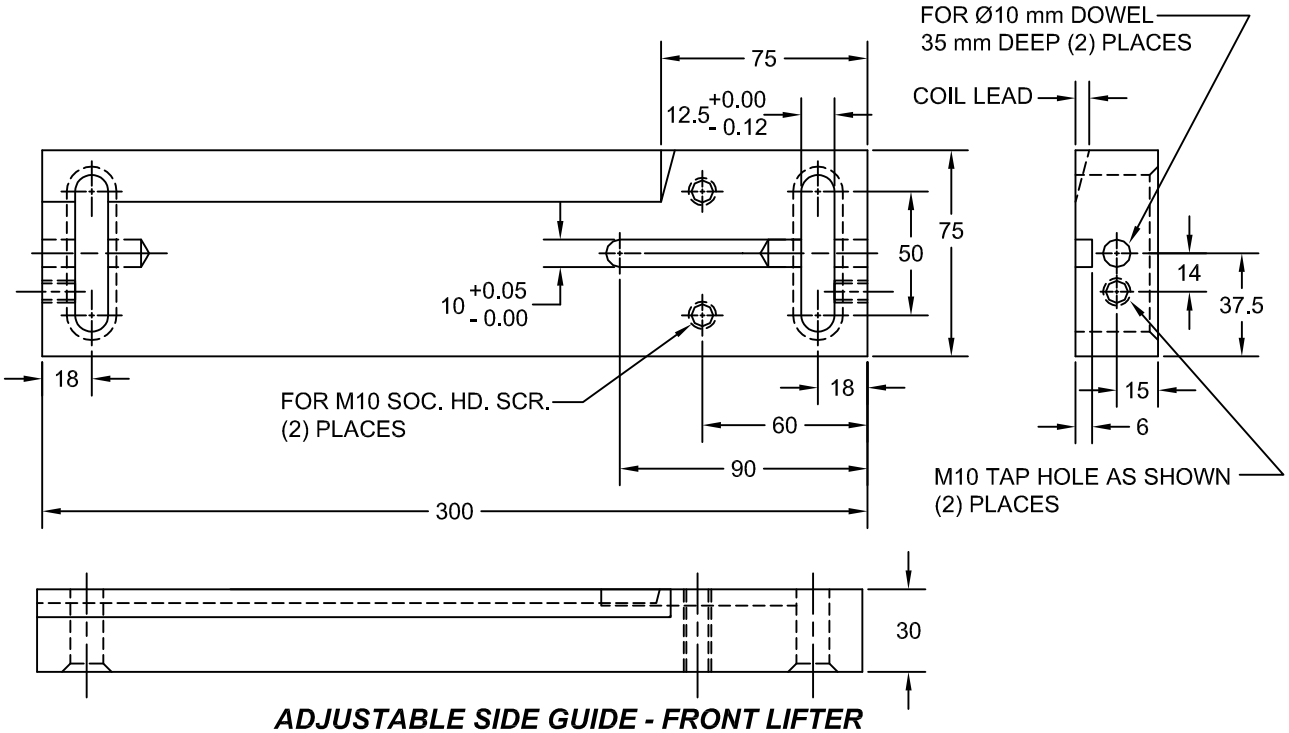

ADJUSTABLE SIDE GUIDE - FRONT LIFTER

JOLICO NUMBER	CHRYSLER CC NUMBER
J-550611	19-235-4800

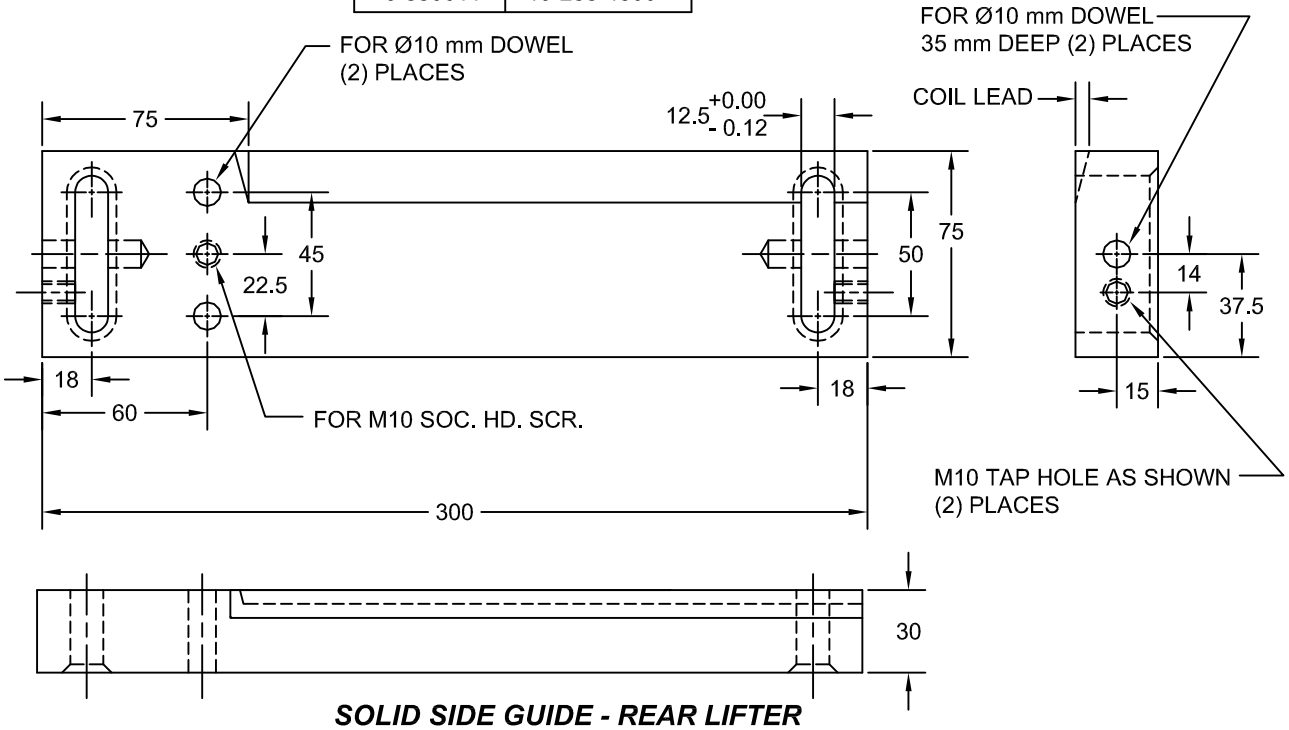

SOLID SIDE GUIDE - REAR LIFTER

JOLICO NUMBER	CHRYSLER CC NUMBER
J-550612	19-235-4801

JOLICO J-B TOOL

PRINTED COPY IS UNCONTROLLED

BAR LIFTER RAILS 125 MIN. TO 225 MAX.

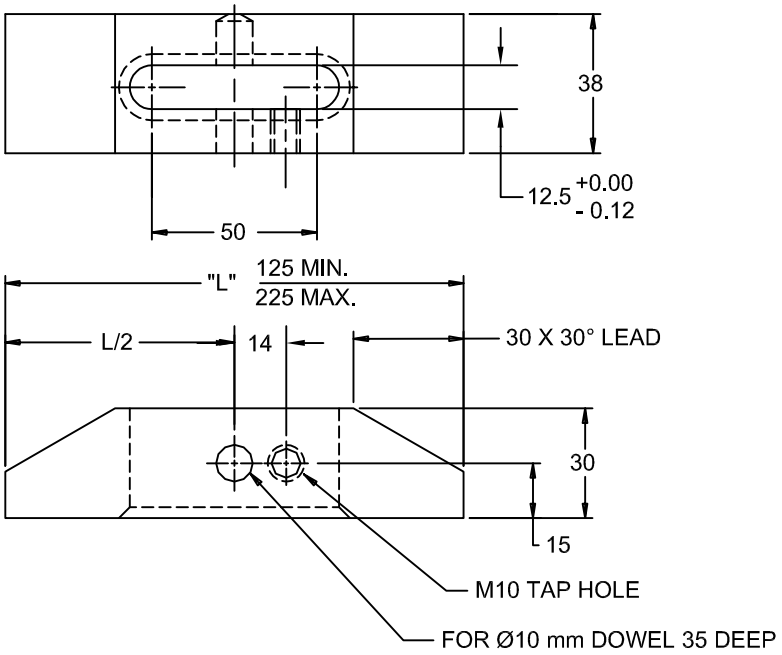

JOLICO NUMBER	CHRYSLER CC NUMBER	L
J-550608-125	19-235-4812	125
J-550608-150	19-235-4815	150
J-550608-175	19-235-4817	175
J-550608-200	19-235-4820	200
J-550608-225	19-235-4822	225

JOLICO J-B TOOL

PRINTED COPY IS UNCONTROLLED

BAR LIFTER RAILS 250 MIN. TO 875 MAX.

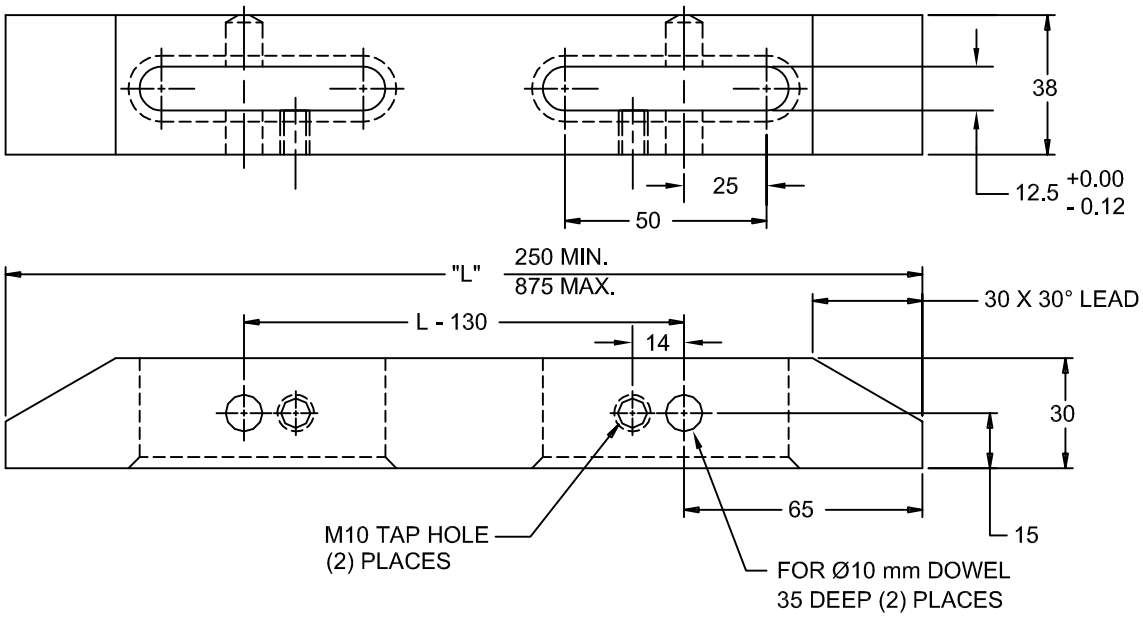

JOLICO NUMBER	CHRYSLER CC NUMBER	L
J-550609-250	19-235-4825	250
J-550609-275	19-235-4827	275
J-550609-300	19-235-4830	300
J-550609-325	19-235-4832	325
J-550609-350	19-235-4835	350
J-550609-375	19-235-4837	375
J-550609-400	19-235-4840	400
J-550609-425	19-235-4842	425
J-550609-450	19-235-4845	450
J-550609-475	19-235-4847	475
J-550609-500	19-235-4850	500
J-550609-525	19-235-4852	525
J-550609-550	19-235-4855	550

JOLICO NUMBER	CHRYSLER CC NUMBER	L
J-550609-575	19-235-4857	575
J-550609-600	19-235-4860	600
J-550609-625	19-235-4862	625
J-550609-650	19-235-4865	650
J-550609-675	19-235-4867	675
J-550609-700	19-235-4870	700
J-550609-725	19-235-4872	725
J-550609-750	19-235-4875	750
J-550609-775	19-235-4877	775
J-550609-800	19-235-4880	800
J-550609-825	19-235-4882	825
J-550609-850	19-235-4885	850
J-550609-875	19-235-4887	875

JOLICO J-B TOOL

PRINTED COPY IS UNCONTROLLED

LIFTER RACK LOCKUP PIN AND STORAGE ASSEMBLY

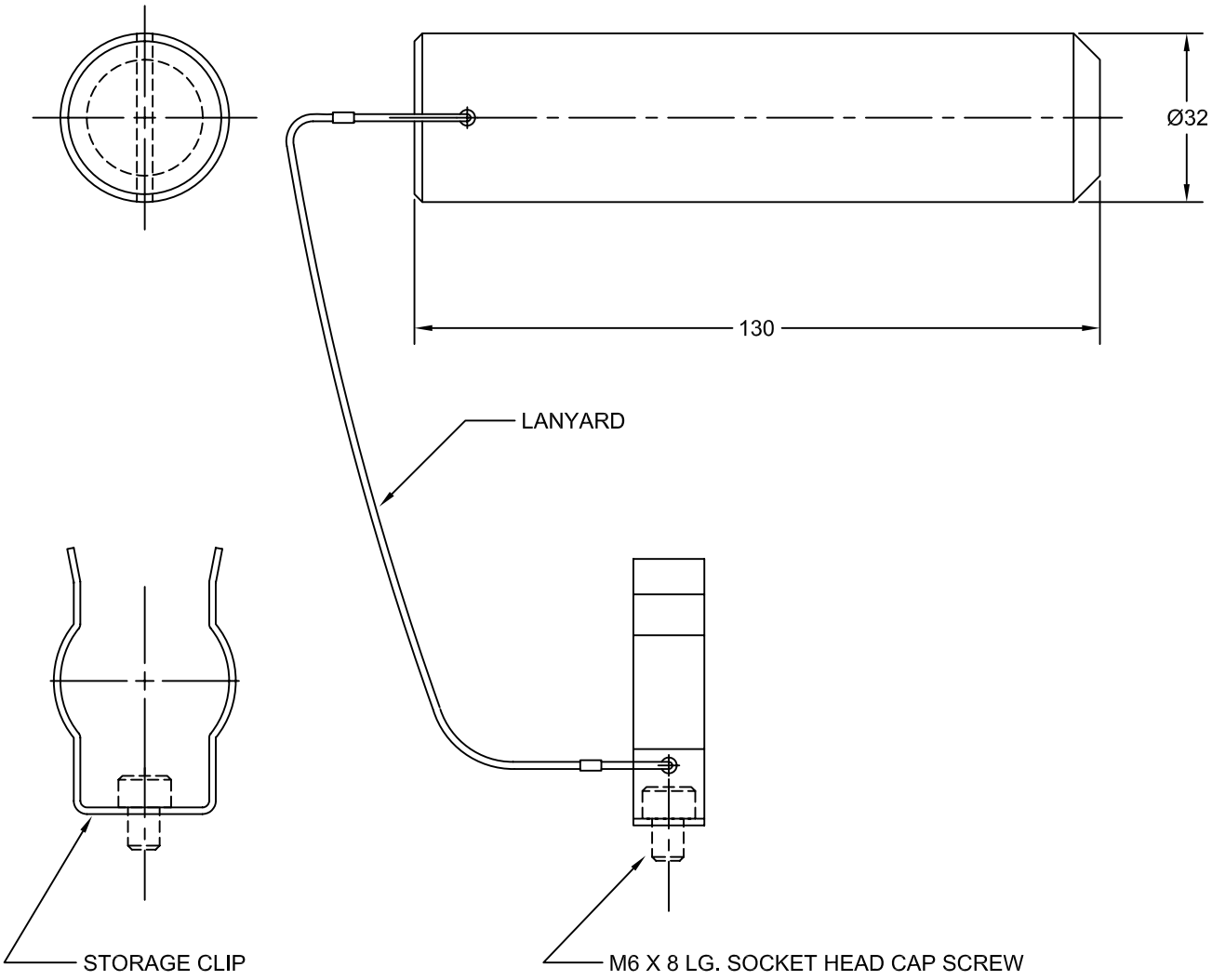

LIFTER RACK LOCK PIN ASSEMBLY
COMES WITH
(1) NYLON RED LOCK PIN
(1) STORAGE CLIP
(2) CRIMP CONNECTORS
(1) LANYARD

JOLICO NUMBER	CHRYSLER CC NUMBER
J-228702	19-010-9625

JOLICO J-B TOOL

PRINTED COPY IS UNCONTROLLED

SHOCK ABSORBER ASSEMBLY

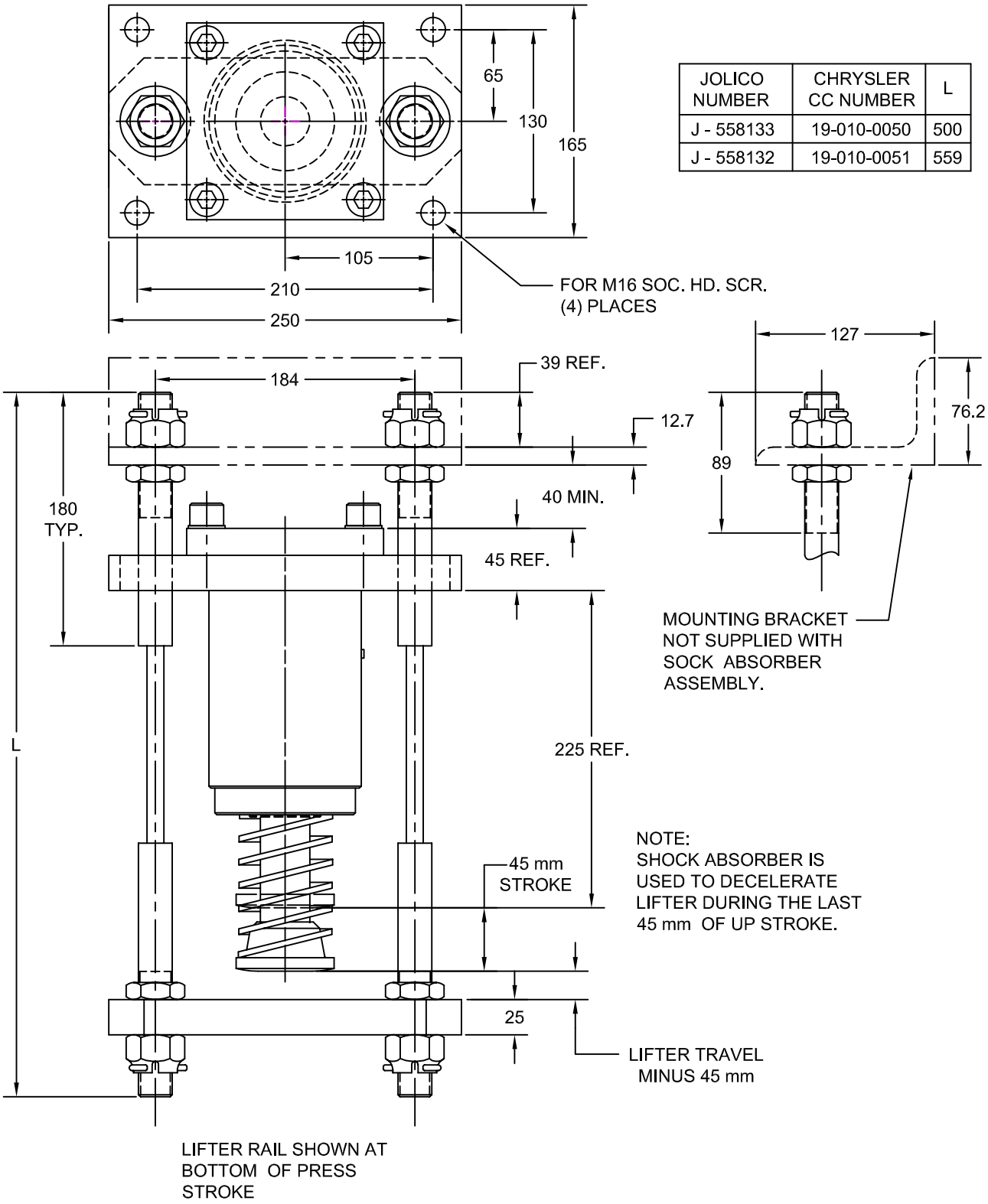

JOLICO NUMBER	CHRYSLER CC NUMBER	L
J - 558133	19-010-0050	500
J - 558132	19-010-0051	559

NOTE:
SHOCK ABSORBER IS USED TO DECELERATE LIFTER DURING THE LAST 45 mm OF UP STROKE.

JOLICO J-B TOOL

PRINTED COPY IS UNCONTROLLED

FLAT RETAINER PLATE

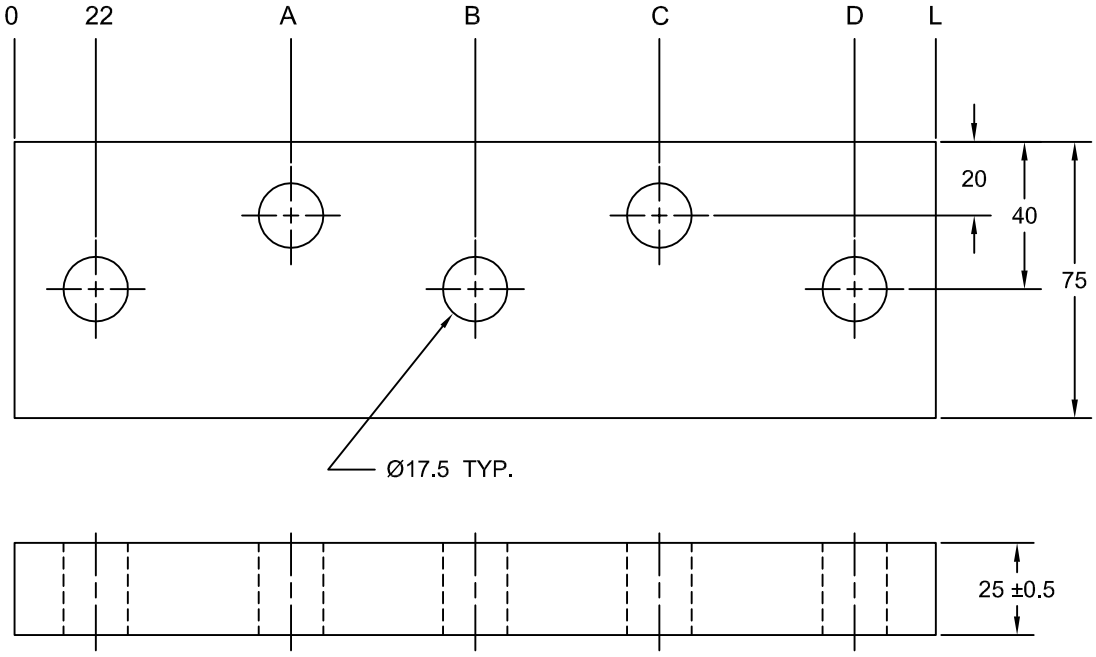

JOLICO NUMBER	CHRYSLER CC NUMBER	L	A	B	C	D	NUMBER OF HOLES
J - 444420	19-235-0153	125	62.5	- - -	- - -	103	3
J - 444421	19-235-0154	150	75	- - -	- - -	128	3
J - 444422	19-235-0155	200	75	- - -	125	178	4
J - 444423	19-235-0156	250	75	125	175	228	5
J - 444424	19-235-0157	300	75	150	225	265	5

JOLICO J-B TOOL

PRINTED COPY IS UNCONTROLLED

VIBRATION DAMPENER MOUNTING BRACKET

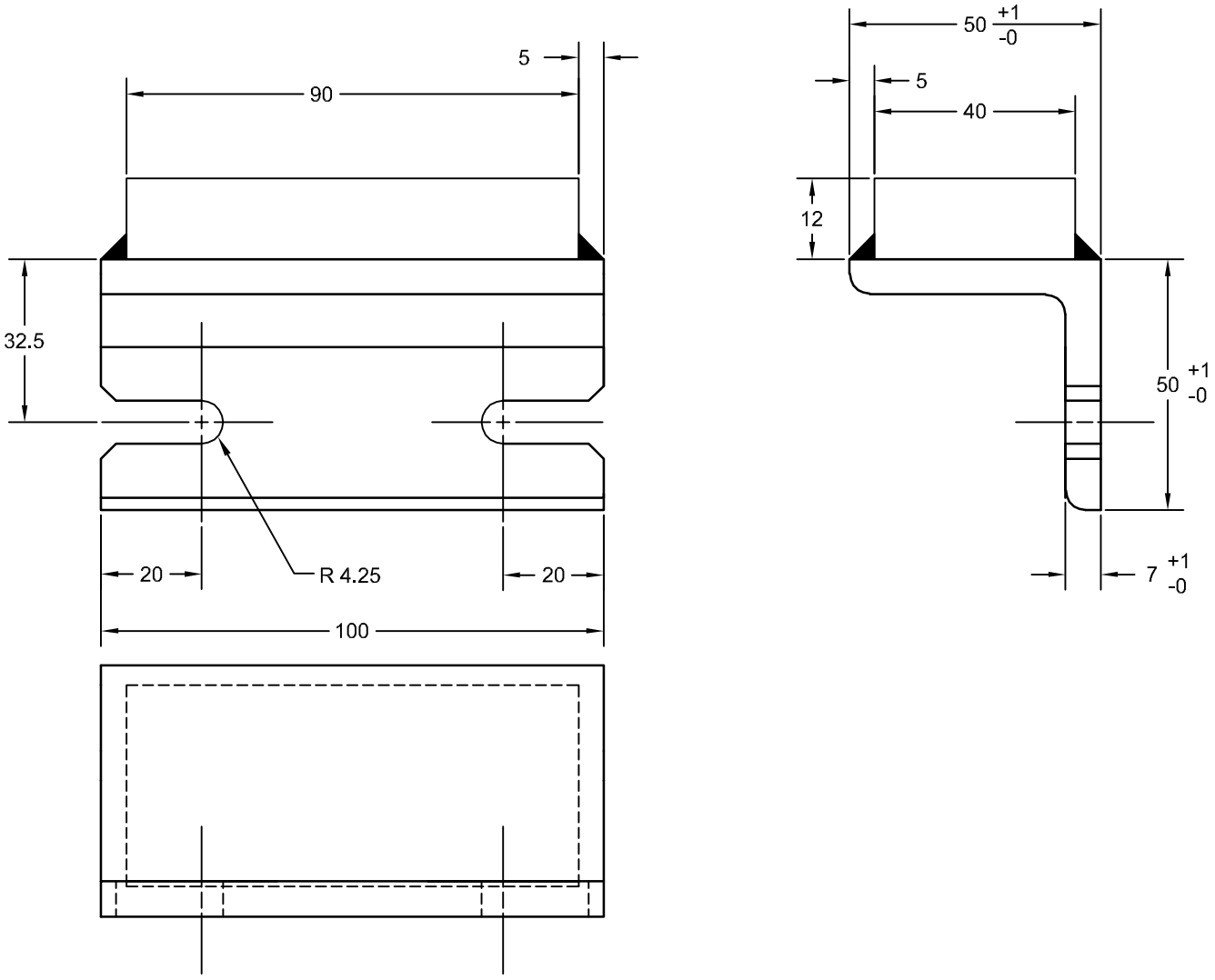

JOLICO NUMBER	COMMODITY CODE
J-550650	19-235-0011

JOLICO J-B TOOL

KEEPER BLOCKS 75 mm WIDE

PRINTED COPY IS UNCONTROLLED

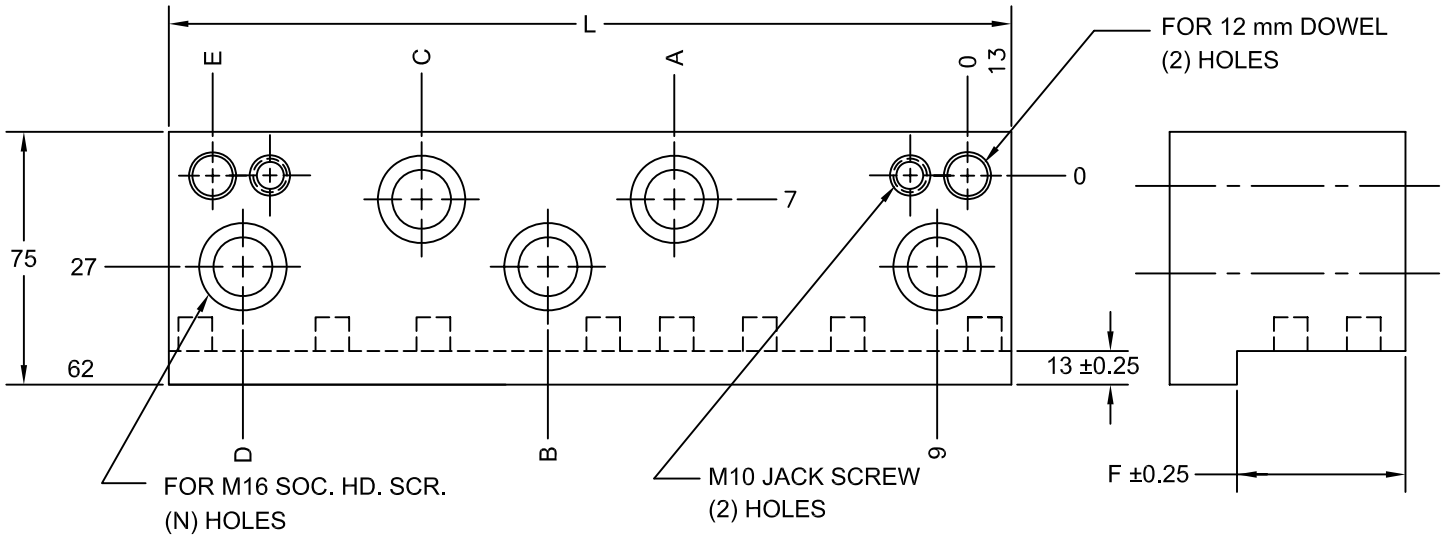

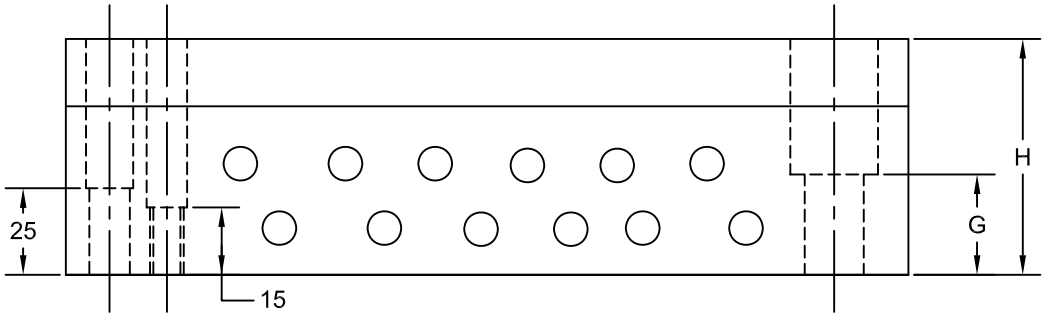

TOLERANCE BETWEEN SCREW HOLES ±0.25 AND DOWEL HOLES ±0.10 mm

JOLICO NUMBER	CHRYSLER CC NUMBER	N HOLES	L	A	B	C	D	E	F	G	H
J-337104	19-010-0510	2	100	—	—	—	65	74			
J-337105	19-010-0512	3	125	49.5	—	—	90	99			
J-337106	19-010-0515	3	150	62	—	—	115	124			
J-337107	19-010-0520	4	200	62	—	112	165	174	35	25	50
J-337108	19-010-0522	5	225	62	99.5	137	190	199			
J-337109	19-010-0525	5	250	62	112	162	215	224			
J-337110	19-010-0530	5	300	62	137	212	265	274			
J-337111	19-010-0610	2	100	—	—	—	65	74			
J-337112	19-010-0612	3	125	49.5	—	—	90	99			
J-337113	19-010-0615	3	150	62	—	—	115	124			
J-337114	19-010-0620	4	200	62	—	112	165	174	40	25	60
J-337115	19-010-0622	5	225	62	99.5	137	190	199			
J-337116	19-010-0625	5	250	62	112	162	215	224			
J-337117	19-010-0630	5	300	62	137	212	265	274			
J-337118	19-010-0710	2	100	—	—	—	65	74			
J-337119	19-010-0712	3	125	49.5	—	—	90	99			
J-337120	19-010-0715	3	150	62	—	—	115	124			
J-337121	19-010-0720	4	200	62	—	112	165	174	50	30	70
J-337122	19-010-0722	5	225	62	99.5	137	190	199			
J-337123	19-010-0725	5	250	62	112	162	215	224			
J-337124	19-010-0730	5	300	62	137	212	265	274			

JOLICO J-B TOOL

PRINTED COPY IS UNCONTROLLED

KEEPER BLOCKS 75 mm WIDE

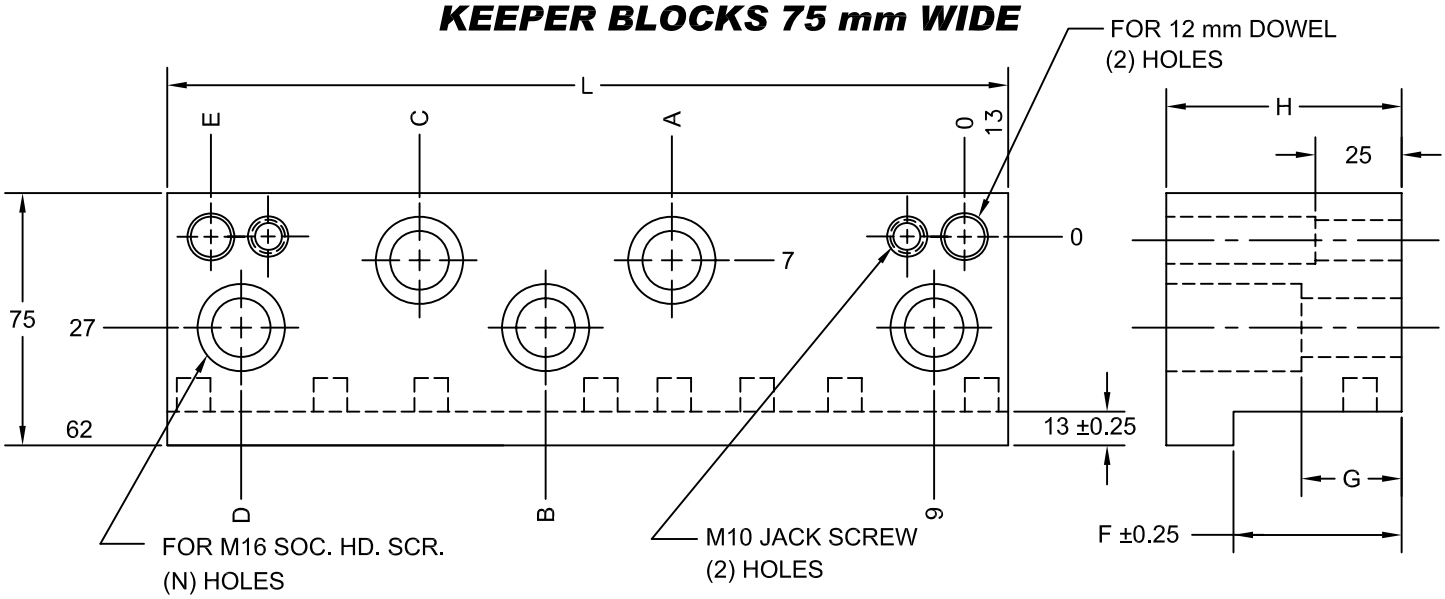

TOLERANCE BETWEEN SCREW HOLES ±0.25 AND DOWEL HOLES ±0.10 mm

JOLICO NUMBER	CHRYSLER CC NUMBER	N HOLES	L	A	B	C	D	E	F	G	H
J-337125	19-010-0810	2	100	—	—	—	65	74			
J-337126	19-010-0812	3	125	49.5	—	—	90	99			
J-337127	19-010-0815	3	150	62	—	—	115	124			
J-337128	19-010-0820	4	200	62	—	112	165	174	55	35	80
J-337129	19-010-0822	5	225	62	99.5	137	190	199			
J-337130	19-010-0825	5	250	62	112	162	215	224			
J-337131	19-010-0830	5	300	62	137	212	265	274			
J-337132	19-010-0910	2	100	—	—	—	65	74			
J-337133	19-010-0912	3	125	49.5	—	—	90	99			
J-337134	19-010-0915	3	150	62	—	—	115	124			
J-337135	19-010-0920	4	200	62	—	112	165	174	65	45	90
J-337136	19-010-0922	5	225	62	99.5	137	190	199			
J-337137	19-010-0925	5	250	62	112	162	215	224			
J-337138	19-010-0930	5	300	62	137	212	265	274			
J-337139	19-010-1010	2	100	—	—	—	65	74			
J-337140	19-010-1012	3	125	49.5	—	—	90	99			
J-337141	19-010-1015	3	150	62	—	—	115	124			
J-337142	19-010-1020	4	200	62	—	112	165	174	75	45	100
J-337143	19-010-1022	5	225	62	99.5	137	190	199			
J-337144	19-010-1025	5	250	62	112	162	215	224			
J-337145	19-010-1030	5	300	62	137	212	265	274			
J-337162	19-010-0410	2	100	—	—	—	65	74			
J-337163	19-010-0412	3	125	49.5	—	—	90	99			
J-337164	19-010-0415	3	150	62	—	—	115	124			
J-337165	19-010-0420	4	200	62	—	112	165	174	95	45	120
J-337166	19-010-0422	5	225	62	99.5	137	190	199			
J-337167	19-010-0425	5	250	62	112	162	215	224			
J-337168	19-010-0430	5	300	62	137	212	265	274			

JOLICO J-B TOOL

PRINTED COPY IS UNCONTROLLED

SELF LUBE GUIDE BLOCKS 45 mm WIDE

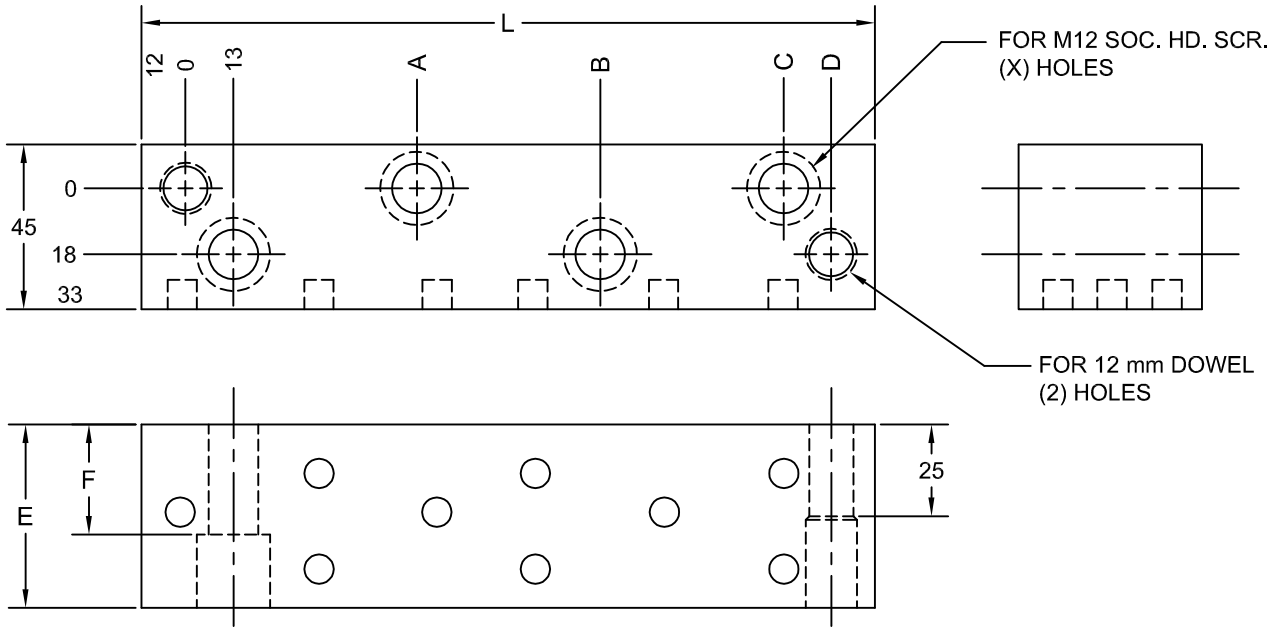

TOLERANCE BETWEEN SCREW HOLES ± 0.25
TOLERANCE BETWEEN DOWEL HOLES ± 0.10

JOLICO NUMBER	CHRYSLER CC NUMBER	X HOLES	L	A	B	C	D	E	F
J-337016	19-010-8005	2	75	—	—	38	51	40	25
J-337017	19-010-8010	2	100	—	—	63	76		
J-337060	19-010-8015	3	125	—	50.5	88	101		
J-337018	19-010-8020	3	150	—	63	113	126		
J-337061	19-010-8025	3	175	—	75.5	138	151		
J-337019	19-010-8030	4	200	63	113	163	176		
J-337062	19-010-8035	4	225	73	128	188	201		
J-337063	19-010-8040	4	250	83	153	213	226		
J-337064	19-010-8055	2	75	—	—	38	51	45	20
J-337065	19-010-8060	2	100	—	—	63	76		
J-337066	19-010-8065	3	125	—	50.5	88	101		
J-337067	19-010-8070	3	150	—	63	113	126		
J-337068	19-010-8075	3	175	—	75.5	138	151		
J-337069	19-010-8080	4	200	63	113	163	176		
J-337070	19-010-8085	4	225	73	128	188	201		
J-337071	19-010-8090	4	250	83	153	213	226		

JOLICO J-B TOOL

PRINTED COPY IS UNCONTROLLED

SELF LUBE GUIDE BLOCKS 45 mm WIDE

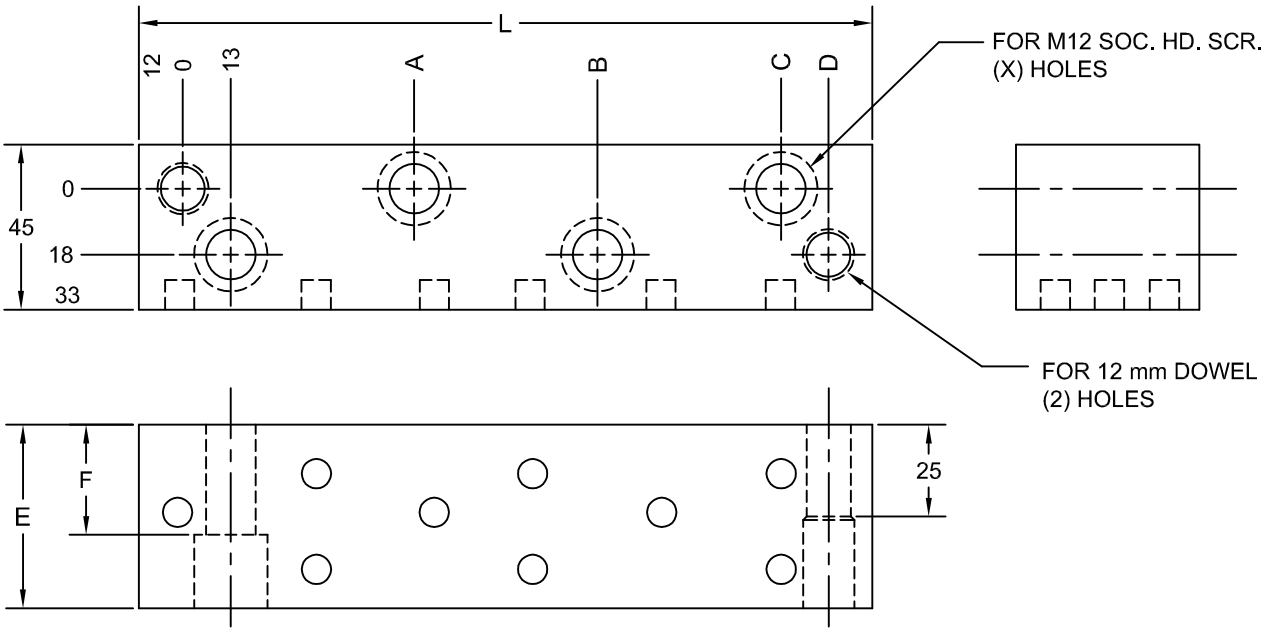

TOLERANCE BETWEEN SCREW HOLES ± 0.25
TOLERANCE BETWEEN DOWEL HOLES ± 0.10

JOLICO NUMBER	CHRYSLER CC NUMBER	X HOLES	L	A	B	C	D	E	F
J-337020	19-010-8105	2	75	—	—	38	51	50	20
J-337021	19-010-8110	2	100	—	—	63	76		
J-337072	19-010-8115	3	125	—	50.5	88	101		
J-337022	19-010-8120	3	150	—	63	113	126		
J-337073	19-010-8125	3	175	—	75.5	138	151		
J-337023	19-010-8130	4	200	63	113	163	176		
J-337074	19-010-8135	4	225	73	128	188	201		
J-337075	19-010-8140	4	250	83	153	213	226		
J-337024	19-010-8155	2	75	—	—	38	51	60	30
J-337025	19-010-8160	2	100	—	—	63	76		
J-337076	19-010-8165	3	125	—	50.5	88	101		
J-337026	19-010-8170	3	150	—	63	113	126		
J-337077	19-010-8175	3	175	—	75.5	138	151		
J-337027	19-010-8180	4	200	63	113	163	176		
J-337078	19-010-8185	4	225	73	128	188	201		
J-337028	19-010-8190	4	250	83	153	213	226		
J-337079	19-010-8205	2	75	—	—	38	51	75	45
J-337029	19-010-8210	2	100	—	—	63	76		
J-337080	19-010-8215	3	125	—	50.5	88	101		
J-337030	19-010-8220	3	150	—	63	113	126		
J-337081	19-010-8225	3	175	—	75.5	138	151		
J-337031	19-010-8230	4	200	63	113	163	176		
J-337082	19-010-8235	4	225	73	128	188	201		
J-337032	19-010-8240	4	250	83	153	213	226		

JOLICO J-B TOOL

PRINTED COPY IS UNCONTROLLED

SELF LUBE GUIDE BLOCKS 60 mm WIDE

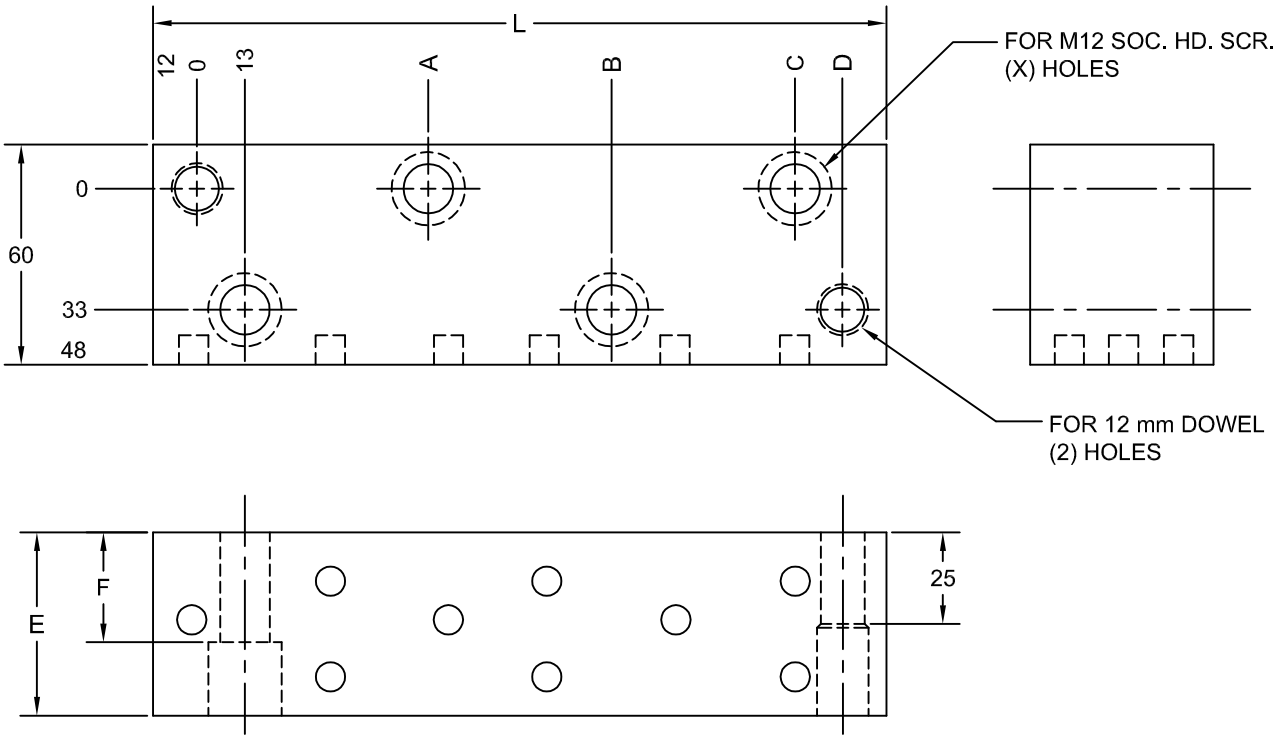

TOLERANCE BETWEEN SCREW HOLES ± 0.25
TOLERANCE BETWEEN DOWEL HOLES ± 0.10

JOLICO NUMBER	CHRYSLER CC NUMBER	X HOLES	L	A	B	C	D	E	F
J-337083	19-010-8255	2	75	—	—	38	51	50	20
J-337084	19-010-8260	2	100	—	—	63	76		
J-337085	19-010-8265	3	125	—	50.5	88	101		
J-337086	19-010-8270	3	150	—	63	113	126		
J-337087	19-010-8275	3	175	—	75.5	138	151		
J-337088	19-010-8280	4	200	63	113	163	176		
J-337089	19-010-8285	4	225	73	128	188	201		
J-337090	19-010-8290	4	250	83	153	213	226		
J-337091	19-010-8305	2	75	—	—	38	51	60	30
J-337092	19-010-8310	2	100	—	—	63	76		
J-337093	19-010-8315	3	125	—	50.5	88	101		
J-337094	19-010-8320	3	150	—	63	113	126		
J-337095	19-010-8325	3	175	—	75.5	138	151		
J-337096	19-010-8330	4	200	63	113	163	176		
J-337097	19-010-8335	4	225	73	128	188	201		
J-337098	19-010-8340	4	250	83	153	213	226		

JOLICO J-B TOOL

PRINTED COPY IS UNCONTROLLED

SELF LUBE CORNER GUIDE BLOCKS

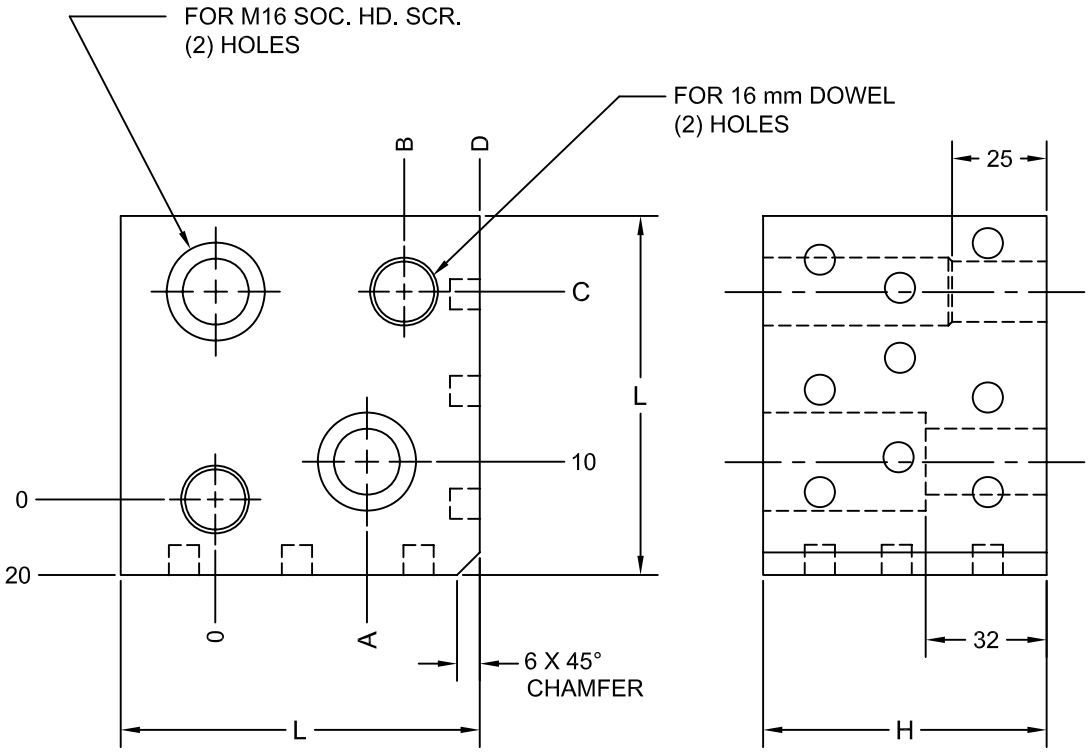

TOLERANCE BETWEEN SCREW HOLES ± 0.25
TOLERANCE BETWEEN DOWEL HOLES ± 0.10

JOLICO NUMBER	CHRYSLER CC NUMBER	L	H	A	B	C	D
J-337033	19-010-8705	80	75	25	35	40	55
J-337034	19-010-8710		100				
J-337035	19-010-8715		125				
J-337036	19-010-8720	95	75	40	50	55	70
J-337037	19-010-8725		100				
J-337038	19-010-8730		125				
J-337039	19-010-8735	120	75	65	75	80	95
J-337040	19-010-8740		100				
J-337041	19-010-8745		125				

JOLICO J-B TOOL

PRINTED COPY IS UNCONTROLLED

M16 RETAINER BOLT ASSEMBLY

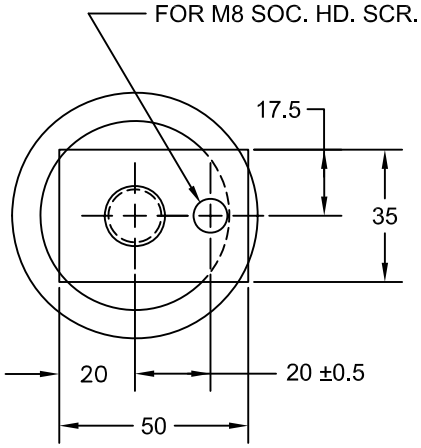

JOLICO NUMBER	CHRYSLER CC NUMBER	A DIM.	B DIM.
J-661820-250	19-010-4125	250	150
J-661820-300	19-010-4130	300	200
J-661820-350	19-010-4135	350	250
J-661820-400	19-010-4140	400	300
J-661820-450	19-010-4145	450	350
J-661820-500	19-010-4150	500	400

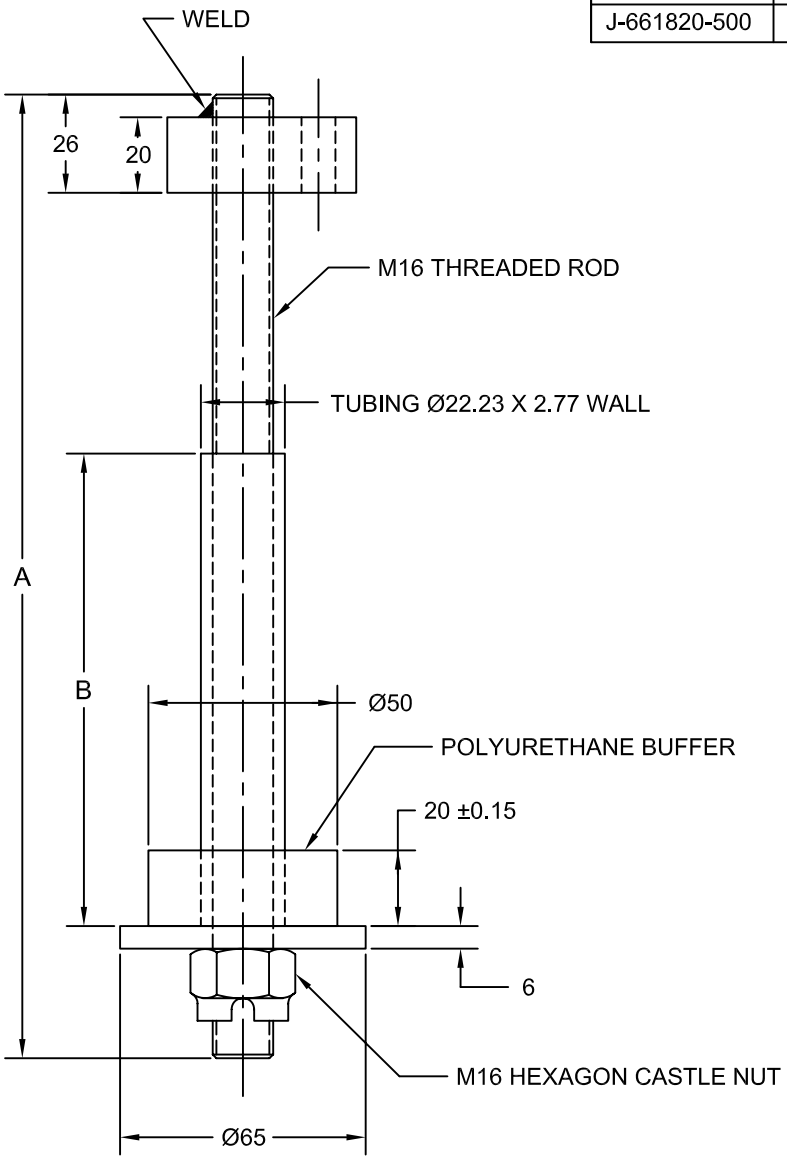

PERMISSIBLE LOAD 550 LBS.

JOLICO J-B TOOL

PRINTED COPY IS UNCONTROLLED

M20 RETAINER BOLT ASSEMBLY

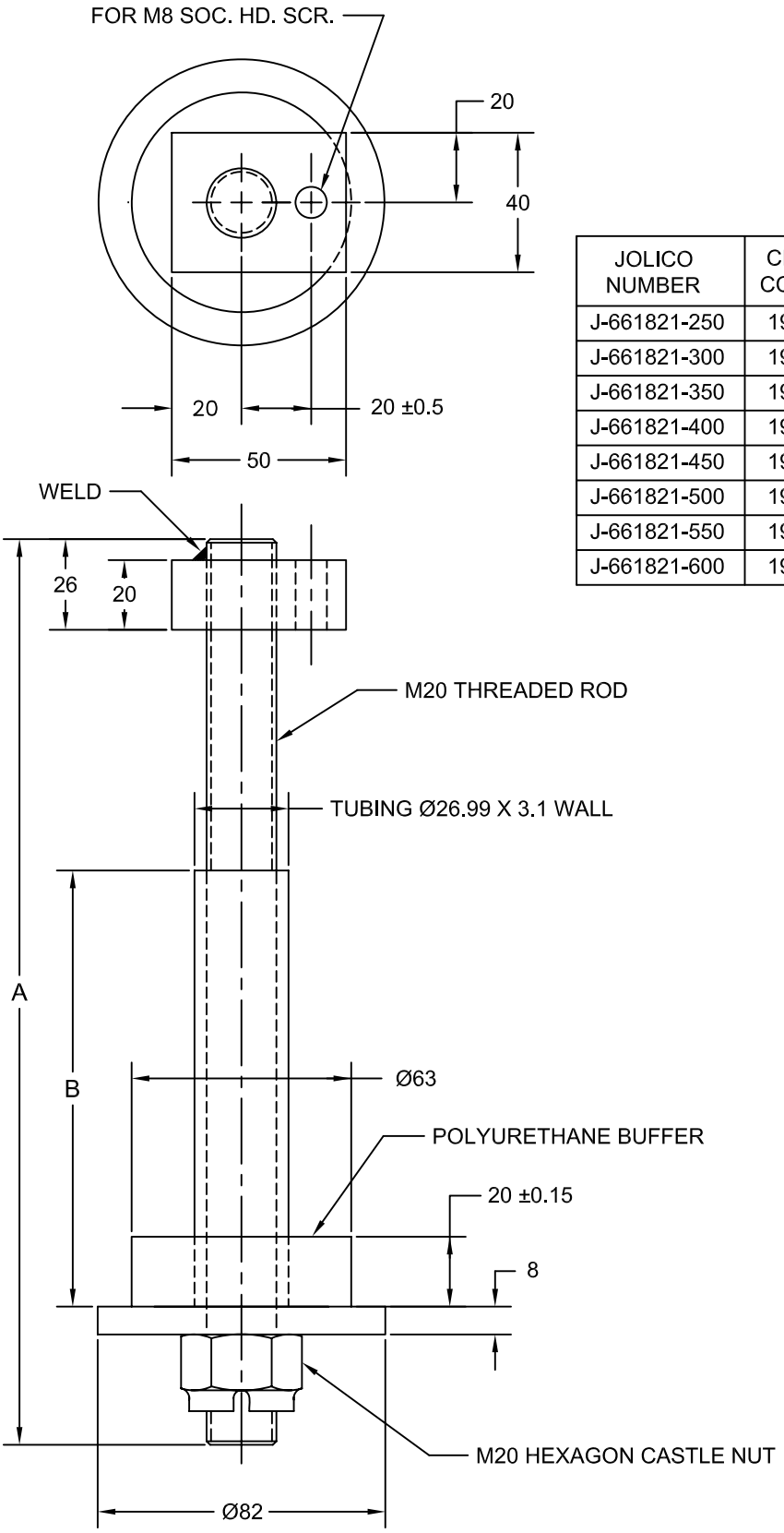

JOLICO NUMBER	CHRYSLER CC NUMBER	A DIM.	B DIM.
J-661821-250	19-010-4225	250	150
J-661821-300	19-010-4230	300	200
J-661821-350	19-010-4235	350	250
J-661821-400	19-010-4240	400	300
J-661821-450	19-010-4245	450	350
J-661821-500	19-010-4250	500	400
J-661821-550	19-010-4255	550	450
J-661821-600	19-010-4260	600	500

PERMISSIBLE LOAD 990 LBS.

JOLICO J-B TOOL

PRINTED COPY IS UNCONTROLLED

M24 RETAINER BOLT ASSEMBLY

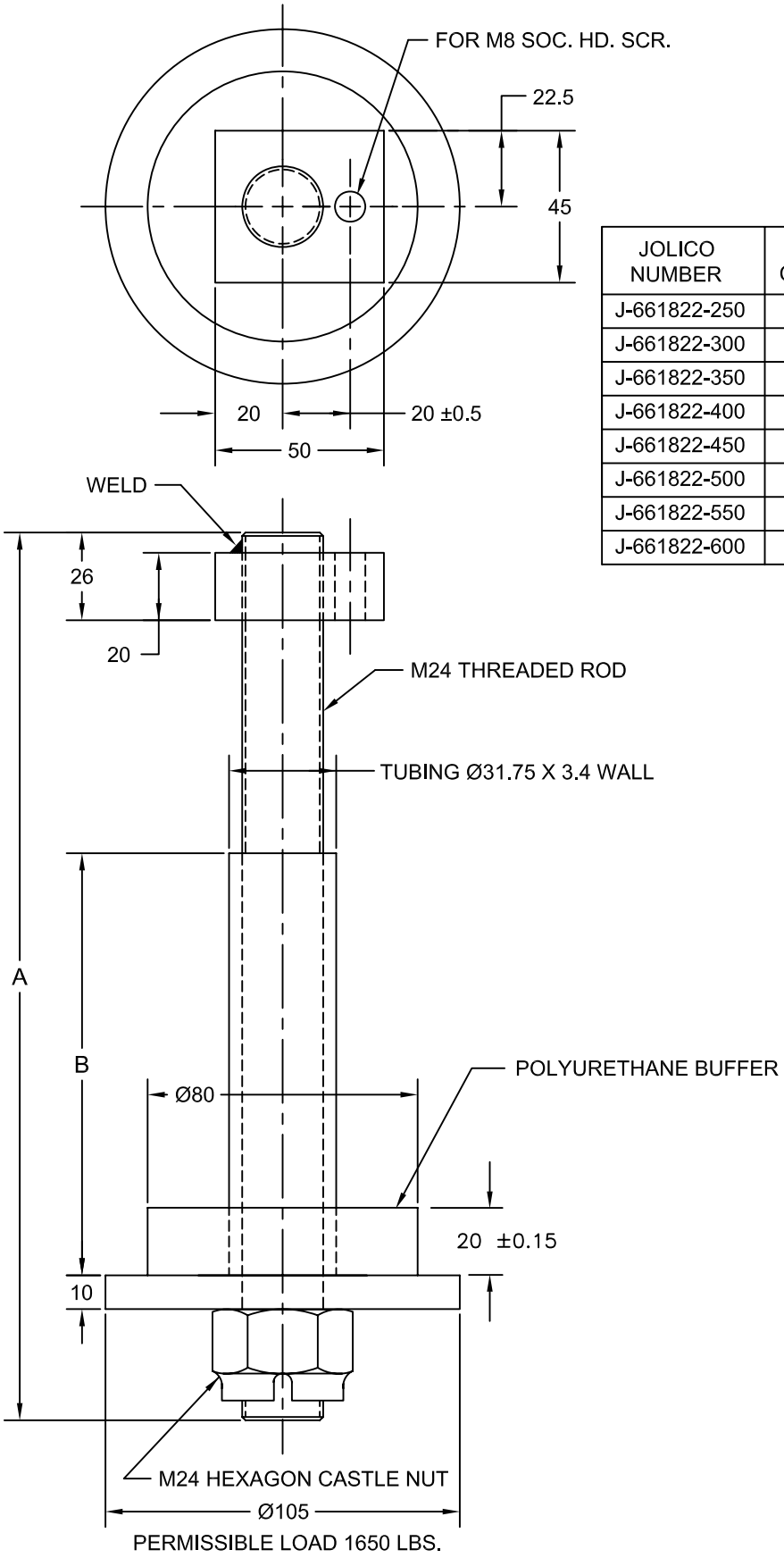

JOLICO NUMBER	CHRYSLER CC NUMBER	A DIM.	B DIM.
J-661822-250	19-010-4325	250	150
J-661822-300	19-010-4330	300	200
J-661822-350	19-010-4335	350	250
J-661822-400	19-010-4340	400	300
J-661822-450	19-010-4345	450	350
J-661822-500	19-010-4350	500	400
J-661822-550	19-010-4355	550	450
J-661822-600	19-010-4360	600	500

PERMISSIBLE LOAD 1650 LBS.

JOLICO J-B TOOL

PRINTED COPY IS UNCONTROLLED

M30 RETAINER BOLT ASSEMBLY

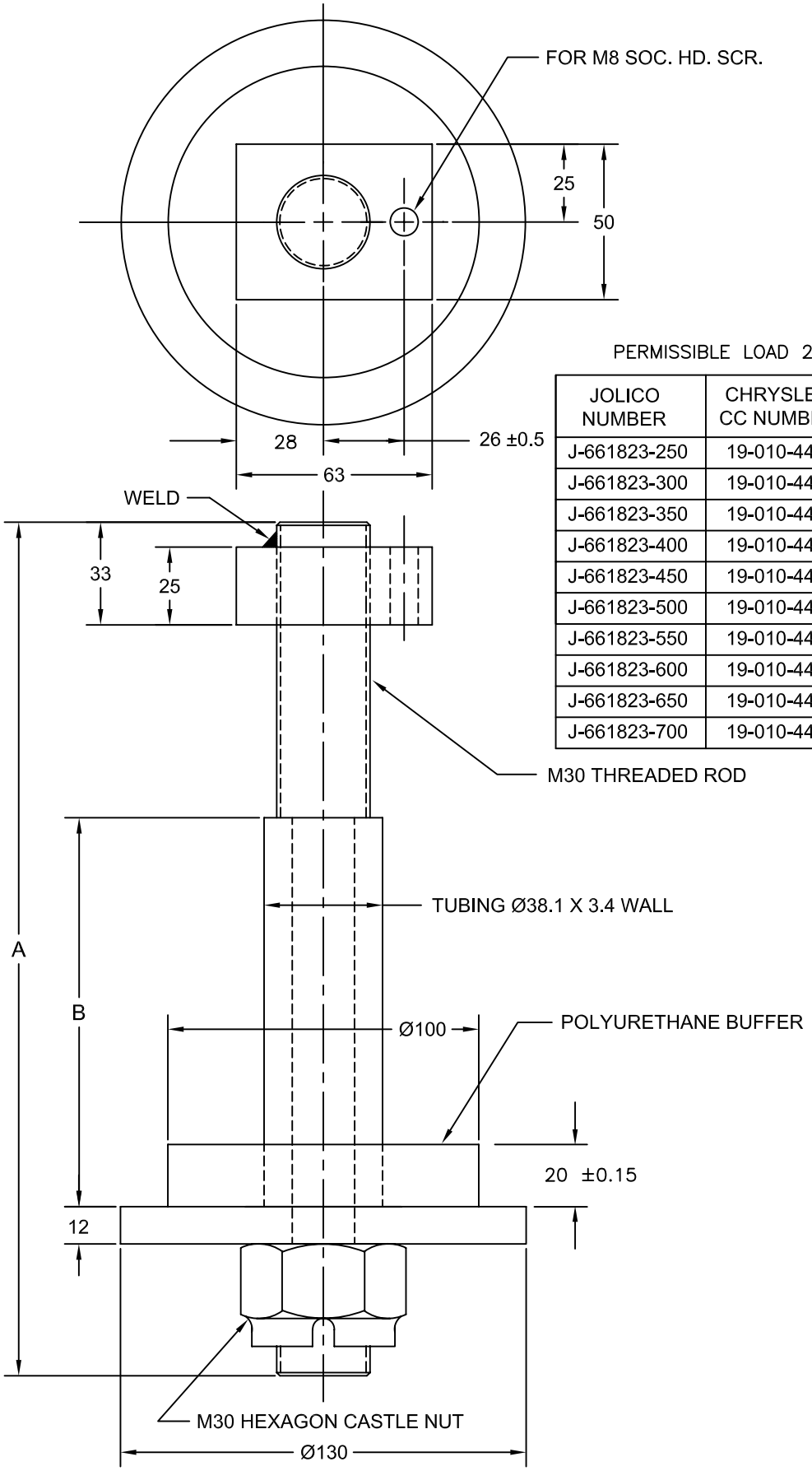

PERMISSIBLE LOAD 2750 LBS.

JOLICO NUMBER	CHRYSLER CC NUMBER	A DIM.	B DIM.
J-661823-250	19-010-4425	250	150
J-661823-300	19-010-4430	300	200
J-661823-350	19-010-4435	350	250
J-661823-400	19-010-4440	400	300
J-661823-450	19-010-4445	450	350
J-661823-500	19-010-4450	500	400
J-661823-550	19-010-4455	550	450
J-661823-600	19-010-4460	600	500
J-661823-650	19-010-4465	650	550
J-661823-700	19-010-4470	700	600

JOLICO J-B TOOL

PRINTED COPY IS UNCONTROLLED

POLYURETHANE BUFFER

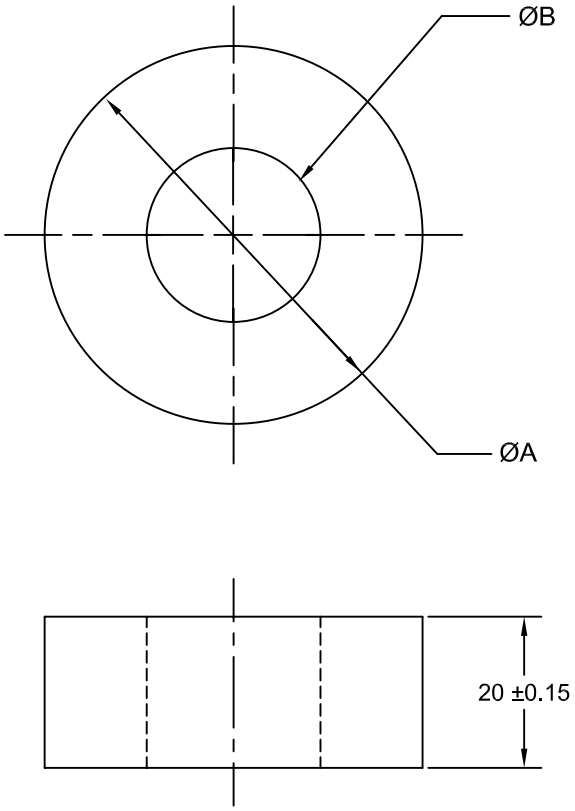

JOLICO NUMBER	CHRYSLER CC NUMBER	ROD SIZE	A DIM.	B DIM.
J-661824	19-010-4101	M16	50	23
J-661825	19-010-4201	M20	63	28
J-661826	19-010-4301	M24	80	34
J-661827	19-010-4401	M30	100	40

JOLICO J-B TOOL

PRINTED COPY IS UNCONTROLLED

BUFFER RETAINER AND RETAINER BLOCK

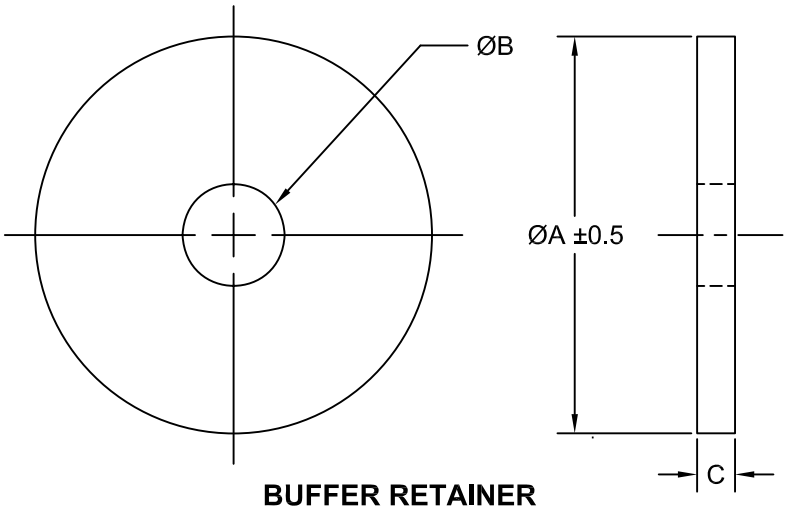

BUFFER RETAINER

JOLICO NUMBER	CHRYSLER CC NUMBER	BOLT SIZE	ØA DIM.	ØB DIM.	C DIM.
J-661828	19-010-4102	M16	65	17	6
J-661829	19-010-4202	M20	82	21	8
J-661830	19-010-4302	M24	105	25	10
J-661831	19-010-4402	M30	130	31	12

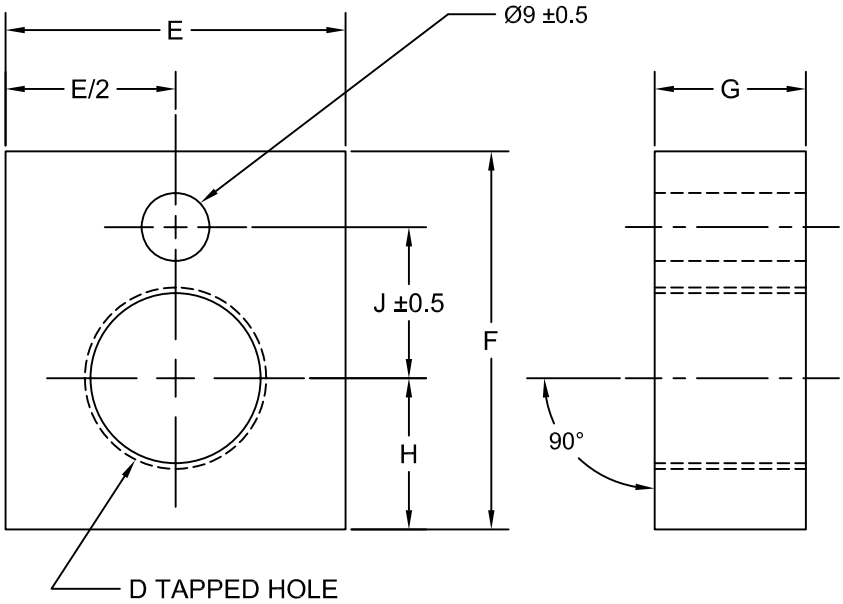

RETAINER BLOCK

JOLICO NUMBER	CHRYSLER CC NUMBER	D	E	F	G	H	J
J-661832	19-010-4103	M16	35	50	20	20	20
J-661833	19-010-4203	M20	40				
J-661834	19-010-4303	M24	45				
J-661835	19-010-4403	M30	50	63	25	28	26

JOLICO J-B TOOL

PRINTED COPY IS UNCONTROLLED

KEEPER PIN ASSEMBLY

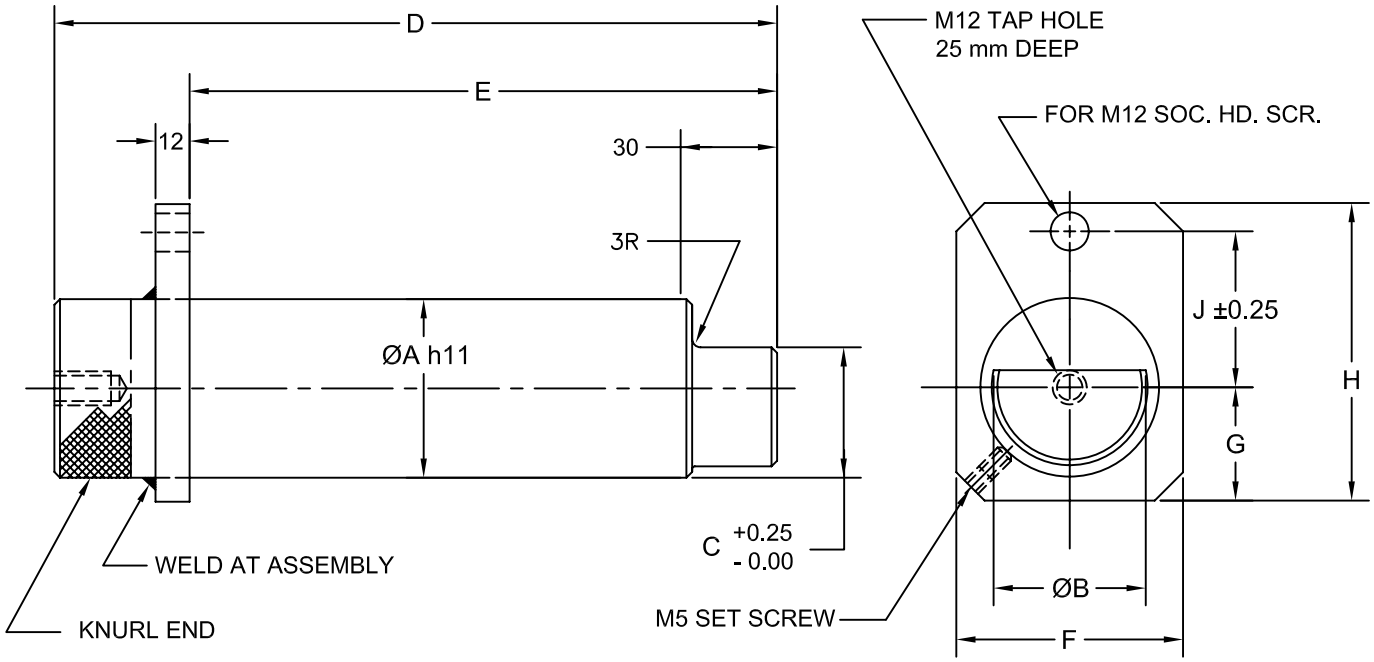

JOLICO NUMBER	CHRYSLER CC NUMBER	A	B	C	D	E	F	G	H	J
J-661920	19-010-9510	40	35	30	205	125 MIN. TO 165 MAX.	50	25	85	50
J-661921	19-010-9520	63	55	46	205	150 MIN. TO 165 MAX.	80	40	105	55
J-661922	19-010-9530	63	55	46	255	165 MIN. TO 215 MAX.	80	40	105	55
J-661923	19-010-9540	80	75	65	230	165 MIN. TO 190 MAX.	90	45	120	65
J-661924	19-010-9550	80	75	65	280	190 MIN. TO 240 MAX.	90	45	120	65

JOLICO J-B TOOL

PRINTED COPY IS UNCONTROLLED

PLATE LOCK / WEAR PAD RETAINER PIN

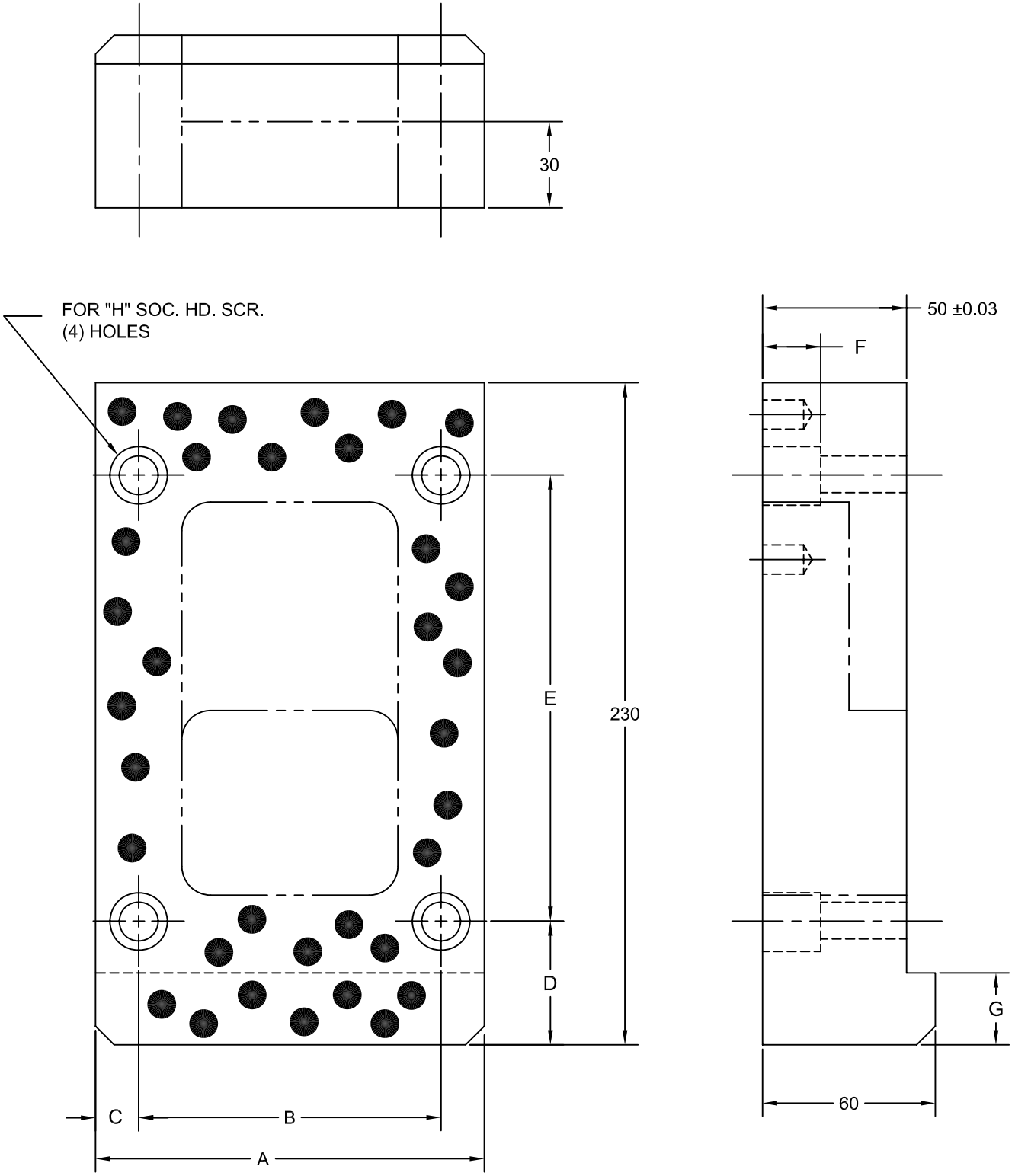

JOLICO NUMBER	CHRYSLER CC NUMBER	A	B	C	D	E	F	G	H
J-442115	19-010-9505	135	105	15	40	155	20	25	M12
J-442110	19-010-9500	150	110	20	20	120	23	40	M20

JOLICO J-B TOOL

PRINTED COPY IS UNCONTROLLED

PAD RETAINER PIN

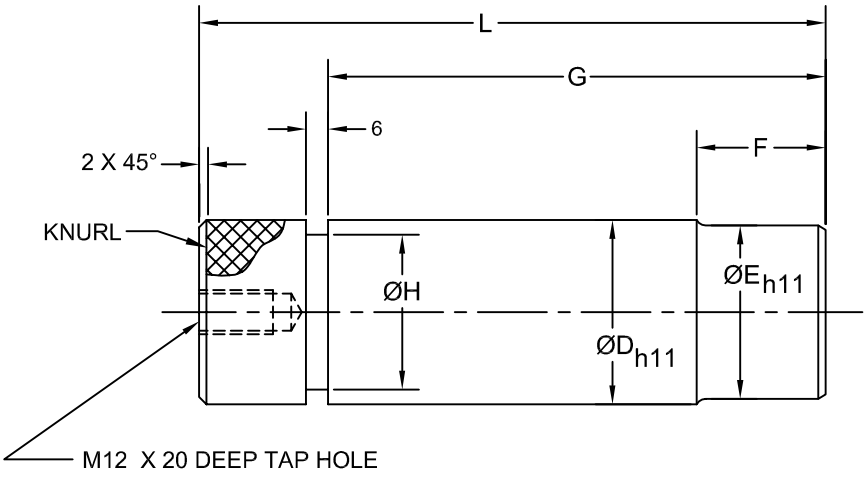

SEE PAGE CH-16.2 FOR PAD RETAINER PLATE

JOLICO NUMBER	CHRYSLER CC NUMBER	D	E	F	G	H	L	PERMISSIBLE DYNAMIC LOAD PER PIN
J-661891	19-010-9660	25	22	25	75	17	110	1000 kg
J-661892	19-010-9670	35	32	30	95	27	130	2500 kg
J-661893	19-010-9680	50	47	35	135	42	170	5000 kg
J-661894	19-010-9690	63	60	45	170	55	210	8000 kg

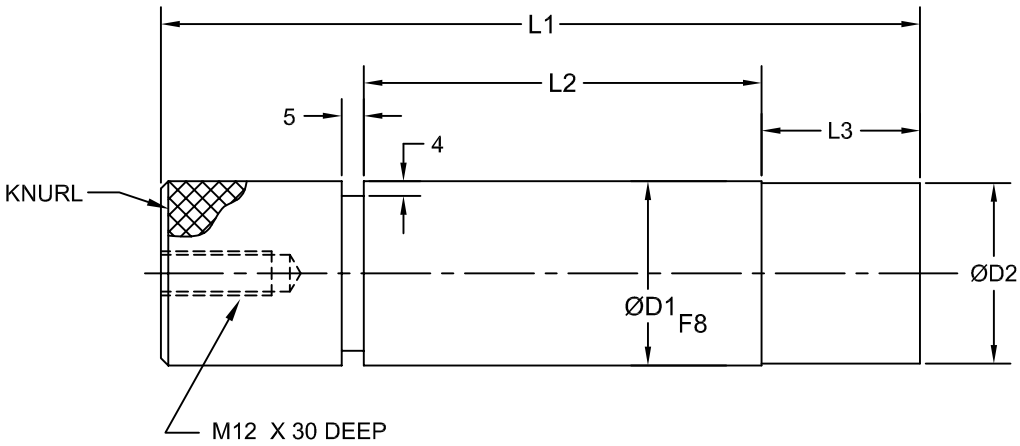

JOLICO NUMBER	CHRYSLER CC NUMBER	ØD1	ØD2	L1	L2	L3
J-661895	19-010-0098	40	39	172	88	39
J-661896	19-010-0097	50	49	208	108	43
J-661897	19-010-0101	63	60	210	125	45

JOLICO J-B TOOL

PRINTED COPY IS UNCONTROLLED

PAD RETAINER PLATE AND PIN

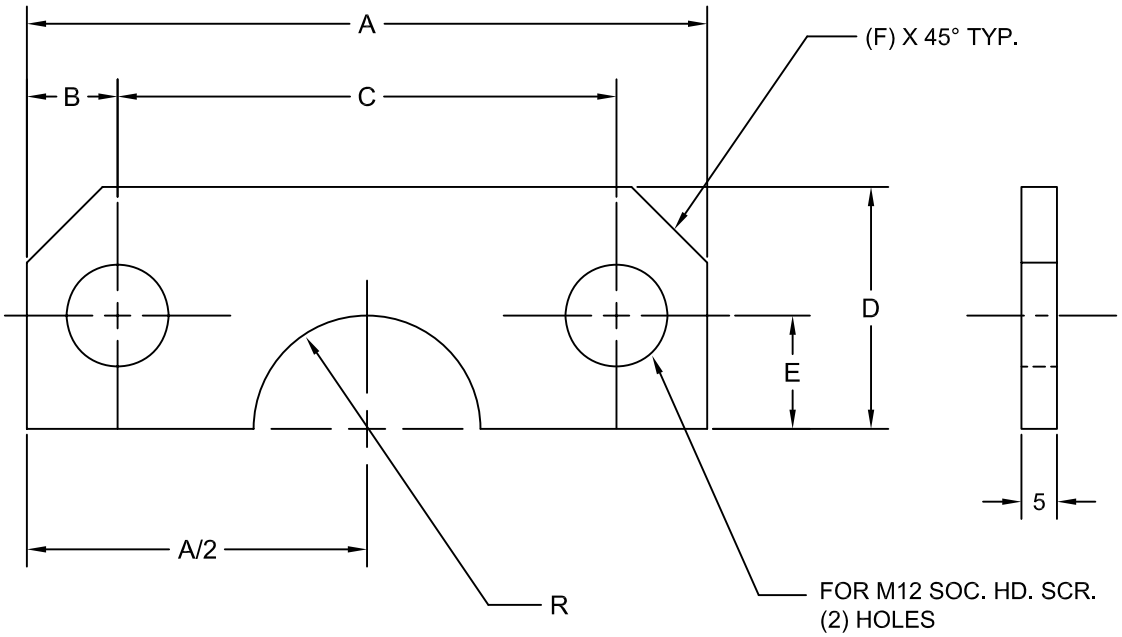

PAD RETAINER PLATE

JOLICO NUMBER	CHRYSLER CC NUMBER	PIN SIZE	R	A	B	C	D	E	F
J-661912	19-010-9360	25	10	70	10	50	25	10	10
J-661913	19-010-9370	35	15	90	12	66	32	15	10
J-661914	19-010-9380	50	22	100	12	76	45	20	15
J-661915	19-010-9390	63	29	115	12	91	50	20	15

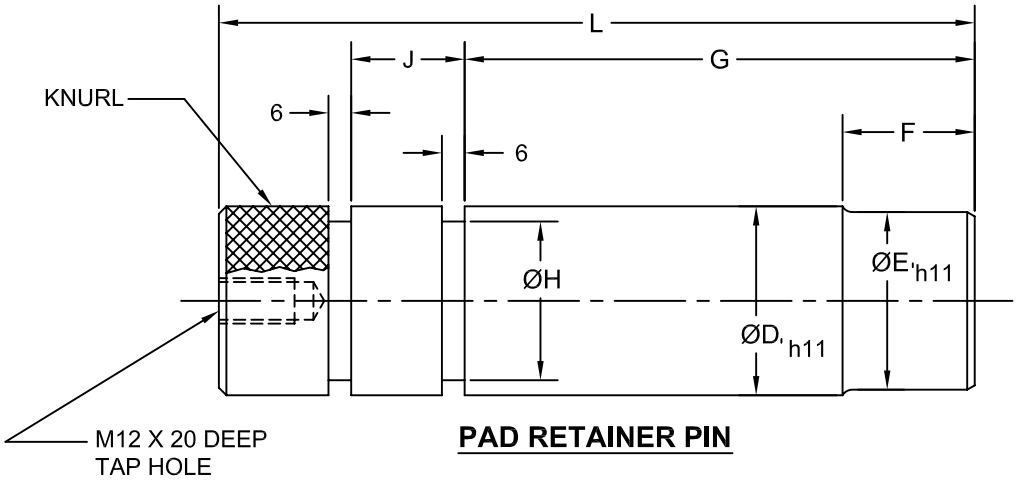

PAD RETAINER PIN

JOLICO NUMBER	CHRYSLER CC NUMBER	D	E	F	G	H	J	L	PERMISSIBLE DYNAMIC LOAD PER PIN	PERMISSIBLE STATIC LOAD PER PIN
J-661815	19-010-9560	25	22	25	75	17	20	130	1000 kg	4500 kg
J-661816	19-010-9570	35	32	30	95	27	25	155	2500 kg	8500 kg
J-661817	19-010-9580	50	47	35	135	42	30	200	5000 kg	17500 kg
J-661818	19-010-9590	63	60	45	170	55	40	250	8000 kg	27500 kg

JOLICO J-B TOOL

PRINTED COPY IS UNCONTROLLED

CASTING LINER FOR PAD RETAINER PIN

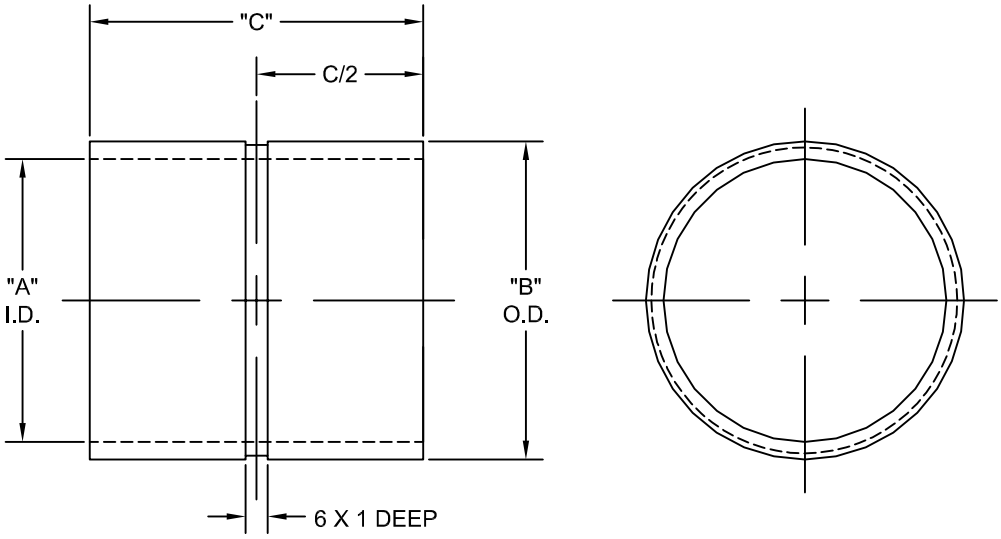

JOLICO NUMBER	CHRYSLER CC NUMBER	PIN DIA.	"A" I. D.	"B" O. D.	"C"
J-881485	19-232-0151	40	41.28	49.21	100
J-881486	19-232-0152	50	52.40	60.33	120
J-881487	19-232-0153	63	65.10	73.00	135

JOLICO J-B TOOL

PRINTED COPY IS UNCONTROLLED

PAD SECONDARY RETAINER PLATE

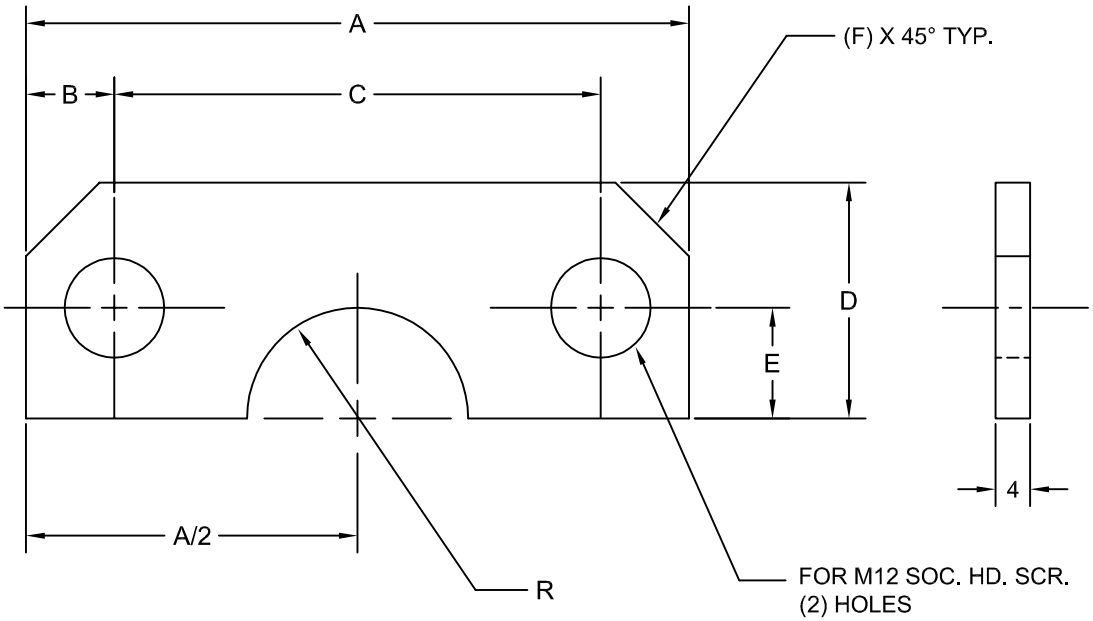

JOLICO NUMBER	CHRYSLER CC NUMBER	PIN SIZE	R	A	B	C	D	E	F
J-661940	19-010-0099	40	18	90	12	66	32	15	10
J-661941	19-010-0096	50	22	100	12	76	45	20	15
J-661942	19-010-0095	63	29	115	12	91	50	20	15

JOLICO J-B TOOL

PRINTED COPY IS UNCONTROLLED

POLYURETHANE PAD RETAINING PIN DAMPENER

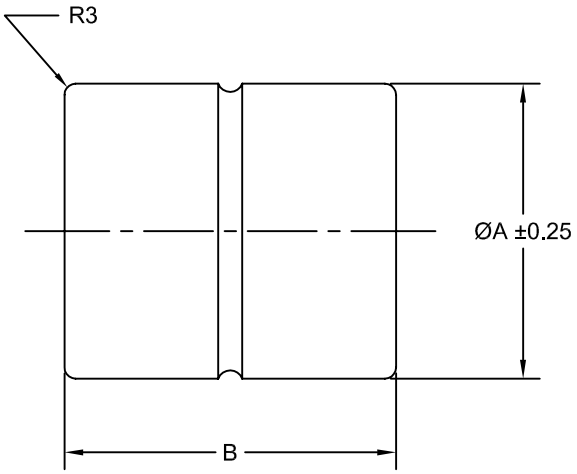

JOLICO NUMBER	CHRYSLER CC NUMBER	PIN SIZE	A	B
J-662020	19-001-0072	40	50	70
J-662021	19-001-0073	50	63	80
J-662022	19-001-0074	63	80	90

JOLICO J-B TOOL

PRINTED COPY IS UNCONTROLLED

SPRING PLUNGER

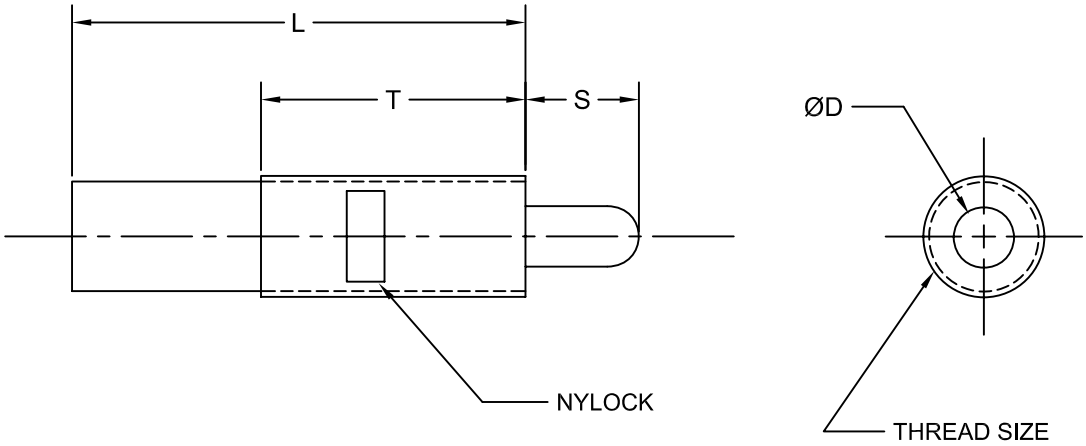

JOLICO NUMBER	CHRYSLER CC NUMBER	THREAD SIZE	D	S	T	L
J-885010	42-497-1005	10 X 1.5	3.8	5	26	30
J-885011	42-497-1205	12 X 1.75	5.5	5	26	30
J-885012	42-497-1210	12 X 1.75	5.5	10	35	43
J-885013	42-497-1610	16 X 2.0	8.0	10	35	60
J-885014	42-497-1615	16 X 2.0	8.0	15	35	60
J-885015	42-497-1620	16 X 2.0	8.0	20	35	85
J-885016	42-497-1630	16 X 2.0	8.0	30	35	125
J-885017	42-497-1650	16 X 2.0	8.0	50	35	155
J-885018	42-497-1680	16 X 2.0	8.0	80	35	185
J-885019	42-497-2415	24 X 3.0	10.0	15	45	60

JOLICO J-B TOOL

PRINTED COPY IS UNCONTROLLED

SPRING GUIDE PIN

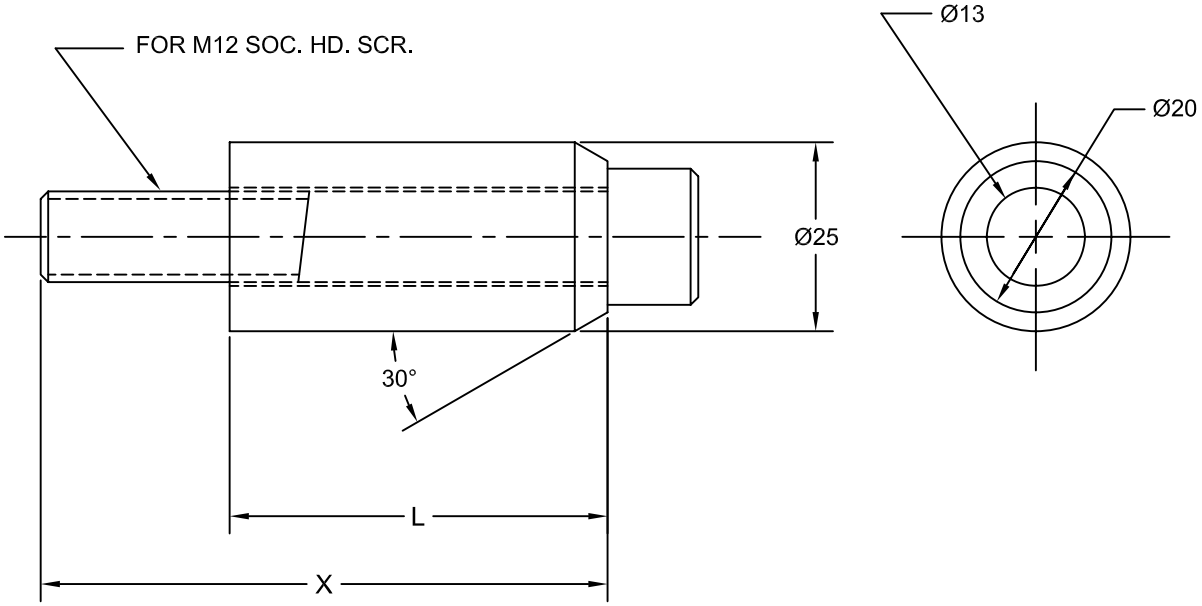

JOLICO NUMBER	CHRYSLER CC NUMBER	PIN LENGTH (L)	SCREW LENGTH (X)
J-440760	19-010-6030	30	55
J-440761	19-010-6035	35	60
J-440762	19-010-6040	40	65
J-440763	19-010-6050	50	75
J-440764	19-010-6055	55	80
J-440765	19-010-6065	65	90
J-440766	19-010-6075	75	100
J-440767	19-010-6085	85	110
J-440768	19-010-6095	95	120
J-440769	19-010-6105	105	130
J-440770	19-010-6115	115	140
J-440771	19-010-6125	125	150
J-440772	19-010-6135	135	160
J-440773	19-010-6155	155	180
J-440774	19-010-6175	175	200
J-440775	19-010-6195	195	220
J-440776	19-010-6215	215	240
J-440777	19-010-6235	235	260
J-440778	19-010-6255	255	280
J-440779	19-010-6275	275	300

JOLICO J-B TOOL

SPOOL RETAINERS

PRINTED COPY IS UNCONTROLLED

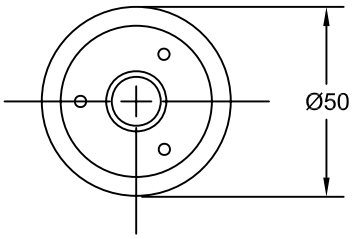

SAFE WORKING
LOAD 4,000 LBS.

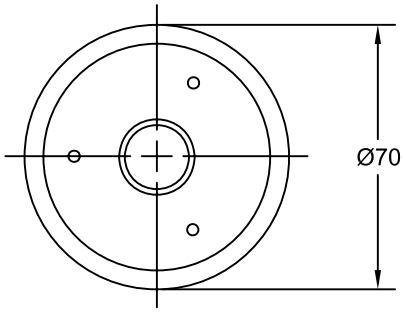

SAFE WORKING
LOAD 5,800 LBS. .

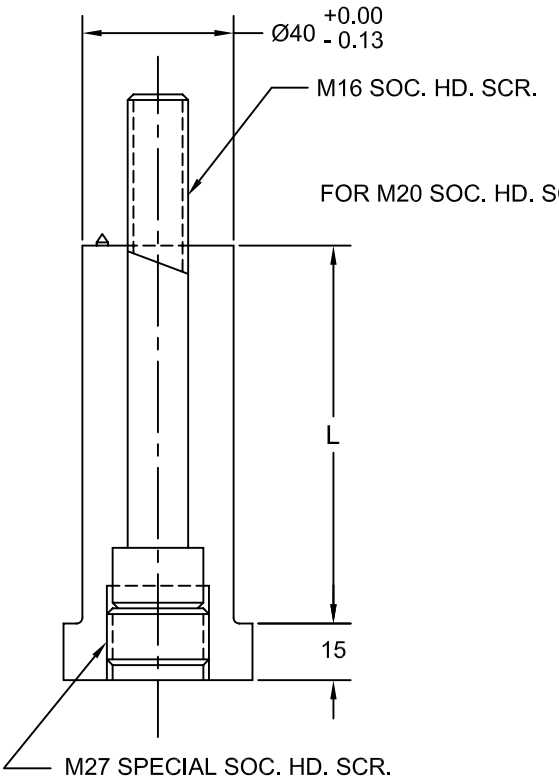

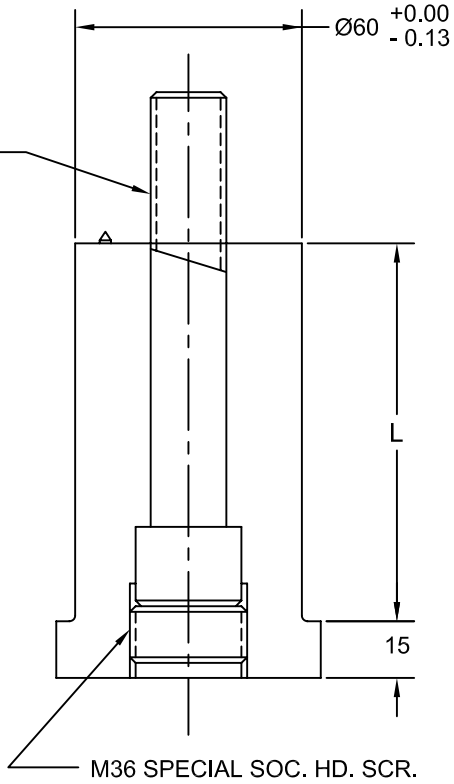

Ø40 SPOOL RETAINER

JOLICO NUMBER	CHRYSLER CC NUMBER	L DIM.
J-661311	19-708-4030	30
J-661312	19-708-4040	40
J-661313	19-708-4045	45
J-661320	19-708-4050	50
J-661321	19-708-4060	60
J-661322	19-708-4065	65
J-661323	19-708-4070	70
J-661330	19-708-4075	75
J-661332	19-708-4090	90
J-661340	19-708-4100	100
J-661342	19-708-4115	115
J-661350	19-708-4130	130
J-661352	19-708-4140	140
J-661360	19-708-4160	160

Ø60 SPOOL RETAINER

JOLICO NUMBER	CHRYSLER CC NUMBER	L DIM.
J-661412	19-708-6040	40
J-661413	19-708-6045	45
J-661420	19-708-6050	50
J-661421	19-708-6060	60
J-661422	19-708-6065	65
J-661423	19-708-6070	70
J-661430	19-708-6075	75
J-661432	19-708-6090	90
J-661440	19-708-6100	100
J-661442	19-708-6115	115
J-661450	19-708-6130	130
J-661452	19-708-6140	140
J-661460	19-708-6160	160

JOLICO J-B TOOL

PRINTED COPY IS UNCONTROLLED

SPOOLRETAINER REVERSED

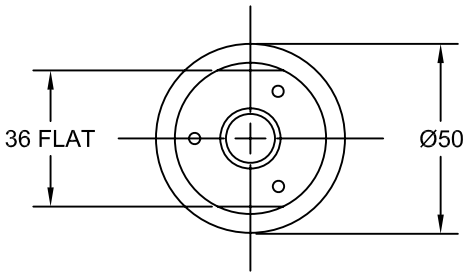

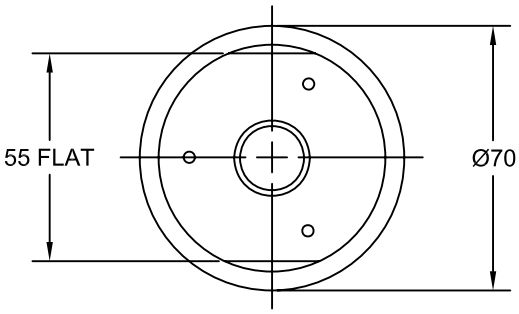

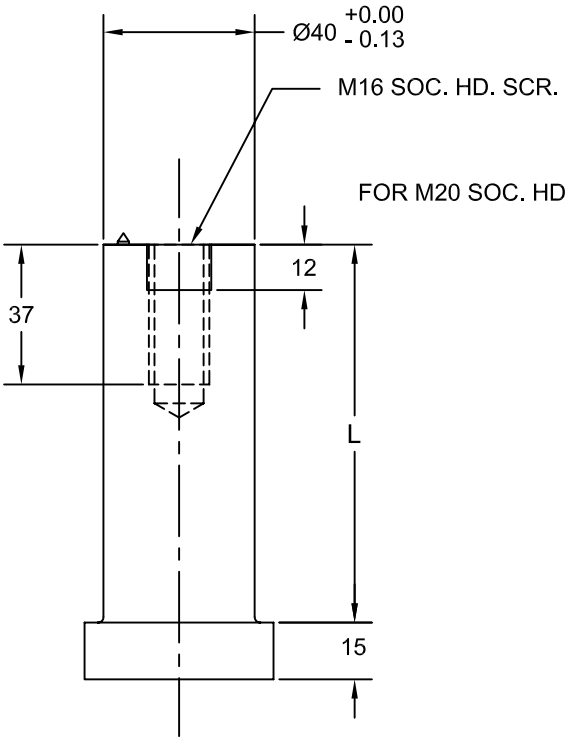

SAFE WORKING LOAD 4,000 LBS

Ø40 SPOOL RETAINER

JOLICO NUMBER	L DIM.
J-661311-R	30
J-661312-R	40
J-661313-R	45
J-661320-R	50
J-661321-R	60
J-661322-R	65
J-661323-R	70
J-661330-R	75
J-661332-R	90
J-661340-R	100
J-661342-R	115
J-661350-R	130
J-661352-R	140
J-661360-R	160

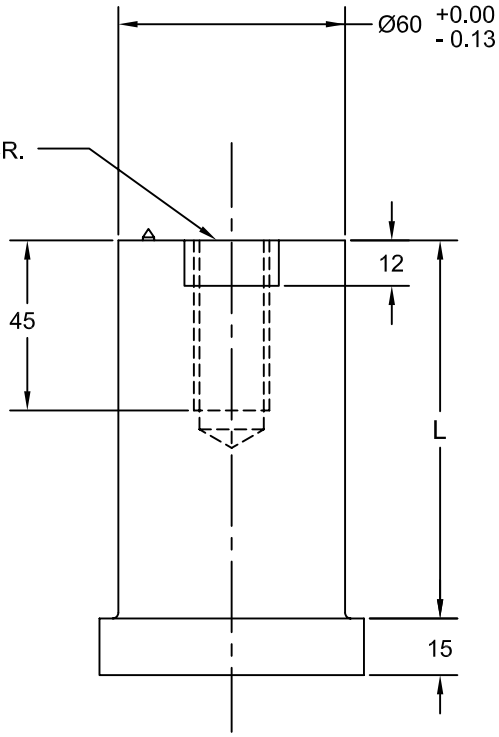

SAFE WORKING LOAD 5,800 LBS

Ø60 SPOOL RETAINER

JOLICO NUMBER	L DIM.
J-661412-R	40
J-661413-R	45
J-661420-R	50
J-661421-R	60
J-661422-R	65
J-661423-R	70
J-661430-R	75
J-661432-R	90
J-661440-R	100
J-661442-R	115
J-661450-R	130
J-661452-R	140
J-661460-R	160

JOLICO J-B TOOL

PRINTED COPY IS UNCONTROLLED

SPRING GUARDS

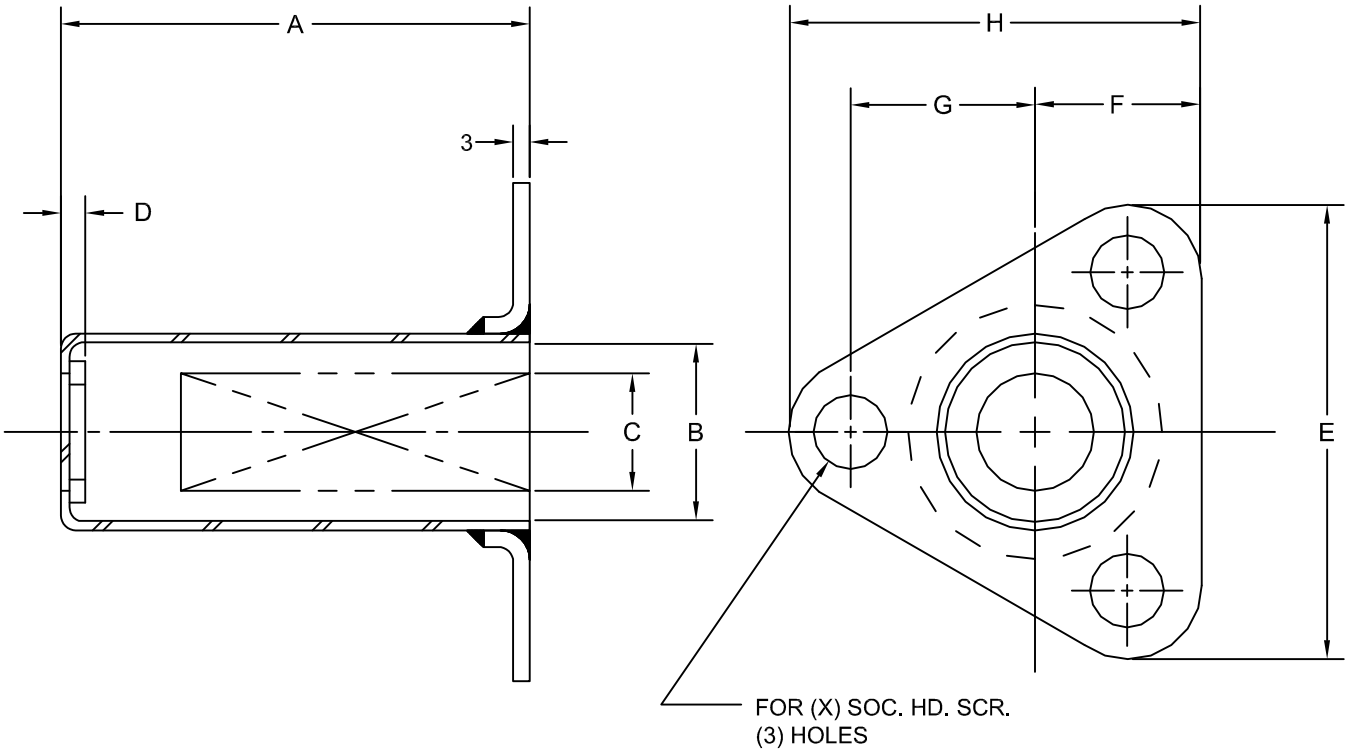

(C) DIA. IS RECOMMENDED,
SMALLER SPRINGS MAY BE USED.

JOLICO NUMBER	CHRYSLER CC NUMBER	A	B	C	D	E	F	G	H	SCREW SIZE (X)
J-10501	19-230-1010	76	32	25	4.8	63	22	26	57	M8
J-10502	19-230-1020	102								
J-10503	19-230-1030	127								
J-10504	19-230-1040	152								
J-10505	19-230-1050	178								
J-10506	19-230-1060	76	40	32	4.8	75	25	32	66	M8
J-10507	19-230-1070	102								
J-10508	19-230-1080	127								
J-10509	19-230-1090	152								
J-10510	19-230-1100	178								
J-10511	19-230-1110	203								
J-10604	19-230-1190	102	50	44	5.5	94	32	42	85	M10
J-10605	19-230-1200	127								
J-10606	19-230-1210	152								
J-10607	19-230-1220	178								
J-10608	19-230-1230	203								
J-10609	19-230-1240	254								
J-10610	19-230-1250	305								

JOLICO J-B TOOL

PRINTED COPY IS UNCONTROLLED

SPRING CANS AND GARDS FOR Ø25 AND Ø32 SPRINGS

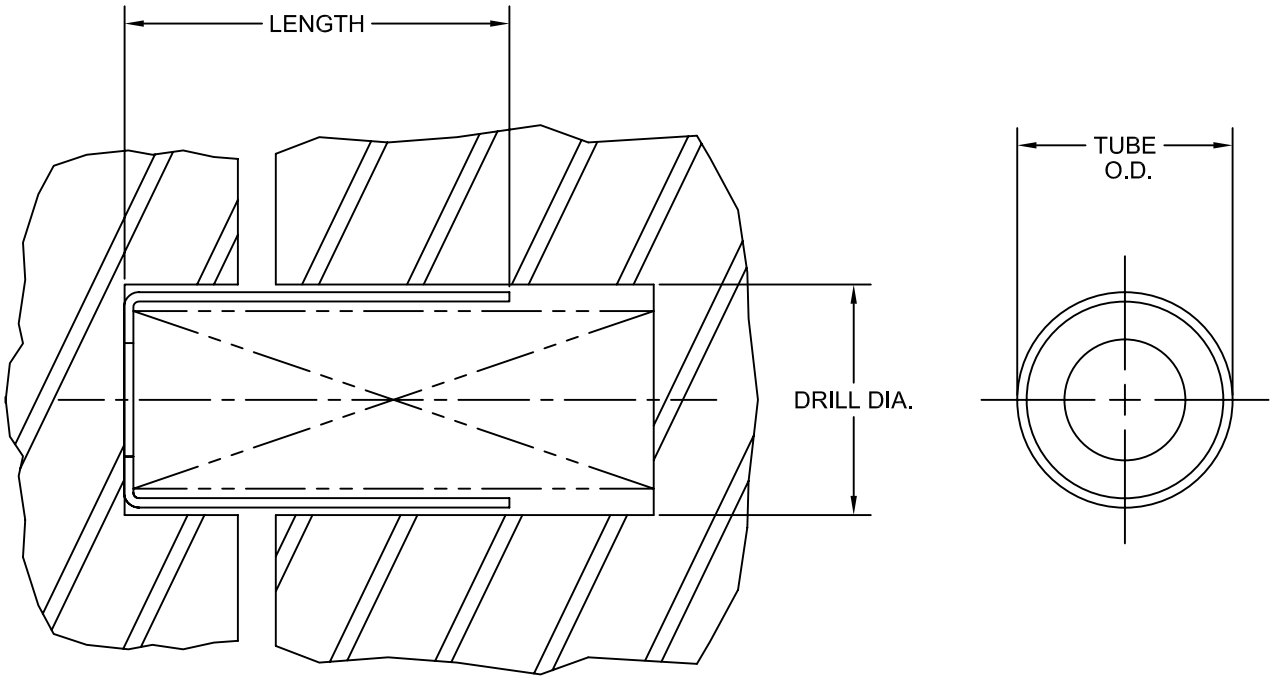

FOR 25 DIAMETER SPRING		
NON. SPRING HOLE DIA.	ROCOMMENDED DRILL DIA.	TUBE O.D. APPROX.
25	30	28.0
JOLICO NUMBER	CHRYSLER CC NUMBER	CAN LENGTH
J-10102	19-200-0810	32
J-10103	19-200-0812	38
J-10104	19-200-0814	44
J-10105	19-200-0816	51
J-10107	19-200-0820	64
J-10109	19-200-0824	76
J-10111	19-200-0828	89
J-10113	19-200-0832	102
J-10117	19-200-0840	127
J-10119	19-200-0848	152

FOR 32 DIAMETER SPRING		
NON. SPRING HOLE DIA.	ROCOMMENDED DRILL DIA.	TUBE O.D. APPROX.
32	36	34.3
JOLICO NUMBER	CHRYSLER CC NUMBER	CAN LENGTH
J-10203	19-200-1012	38
J-10204	19-200-1014	44
J-10205	19-200-1016	51
J-10207	19-200-1020	64
J-10209	19-200-1024	76
J-10211	19-200-1028	89
J-10213	19-200-1032	102
J-10217	19-200-1040	127
J-10219	19-200-1048	152

JOLICO J-B TOOL

PRINTED COPY IS UNCONTROLLED

SPRING CANS AND GARDS FOR Ø40 AND Ø50 SPRINGS

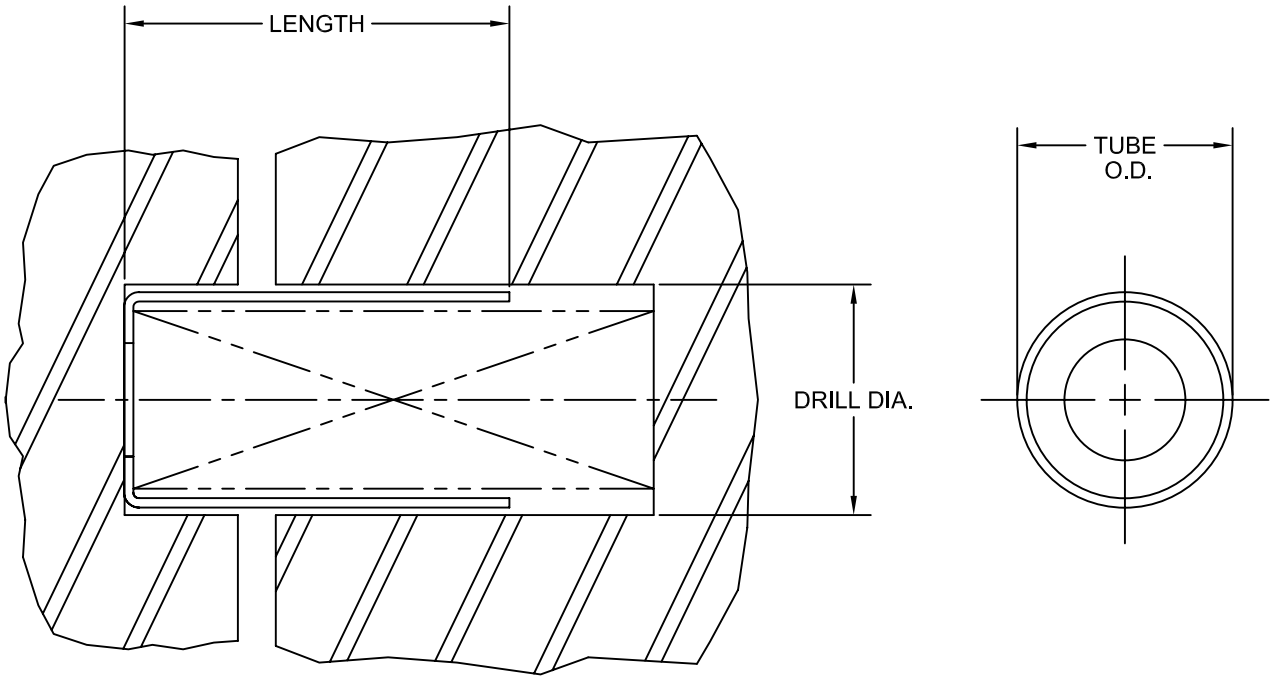

FOR 40 DIAMETER SPRING		
NON. SPRING HOLE DIA.	ROCOMMENDED DRILL DIA.	TUBE O.D. APPROX.
40	43	40.6
JOLICO NUMBER	CHRYSLER CC NUMBER	CAN LENGTH
J-10304	19-200-1214	44
J-10305	19-200-1216	51
J-10307	19-200-1220	64
J-10309	19-200-1224	76
J-10311	19-200-1228	89
J-10313	19-200-1232	102
J-10317	19-200-1240	127
J-10319	19-200-1248	152
J-10321	19-200-1256	178

FOR 50 DIAMETER SPRING		
NON. SPRING HOLE DIA.	ROCOMMENDED DRILL DIA.	TUBE O.D. APPROX.
50	56	53.3
JOLICO NUMBER	CHRYSLER CC NUMBER	CAN LENGTH
J-10405	19-200-1616	51
J-10407	19-200-1620	64
J-10409	19-200-1624	76
J-10411	19-200-1628	89
J-10413	19-200-1632	102
J-10417	19-200-1640	127
J-10419	19-200-1648	152
J-10422	19-200-1664	203
J-10423	19-200-1672	229

JOLICO J-B TOOL

PRINTED COPY IS UNCONTROLLED

GUIDE PIN RETAINER BOLT

A DIA.	PERMISSIBLE LOAD RATE PER ASS'Y
50	990 LBS.
63	1650 LBS.
80	2750 LBS.

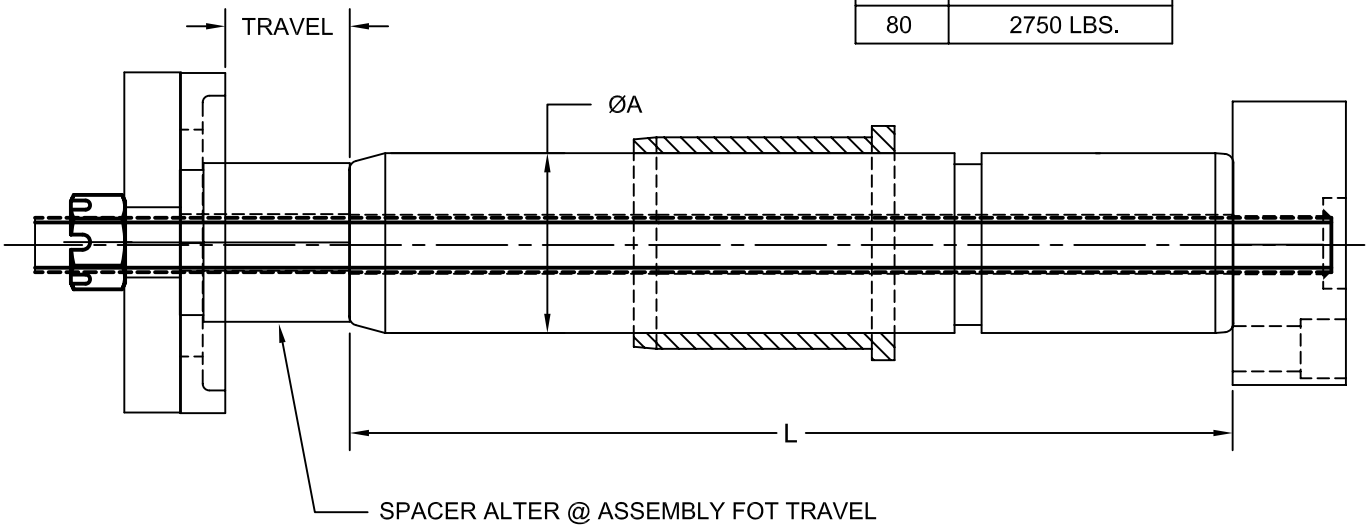

**** THIS ASSEMBLY IS SUPPLIED WITH THE BUSHING***

ØA DIM.	JOLICO NUMBER	CHRYSLER CC NUMBER	L DIM.	TRAVEL RANGE	THREAD SIZE X LENGHT
Ø50	J-118000	19-010-6505	180	20 - 50	M20 X 350
	J-118001	19-010-6507	200	40 - 70	M20 X 370
	J-118002	19-010-6509	225	65 - 95	M20 X 395
	J-118003	19-010-6512	250	90 - 120	M20 X 420
Ø63	J-118100	19-010-6605	200	20 - 50	M24 X 380
	J-118101	19-010-6607	225	40 - 75	M24 X 405
	J-118102	19-010-6610	250	70 - 100	M24 X 430
	J-118103	19-010-6613	280	100 - 130	M24 X 455
Ø80	J-118201	19-010-6707	250	35 - 75	M30 X 440
	J-118202	19-010-6710	280	65 - 105	M30 X 475
	J-118203	19-010-6714	315	100 - 140	M30 X 500
	J-118204	19-010-6718	355	140 - 180	M30 X 540

JOLICO J-B TOOL

PRINTED COPY IS UNCONTROLLED

GUIDE PIN RETAINER BOLT

A DIA.	PERMISSIBLE LOAD RATE PER ASS'Y
50	990 LBS.
63	1650 LBS.
80	2750 LBS.

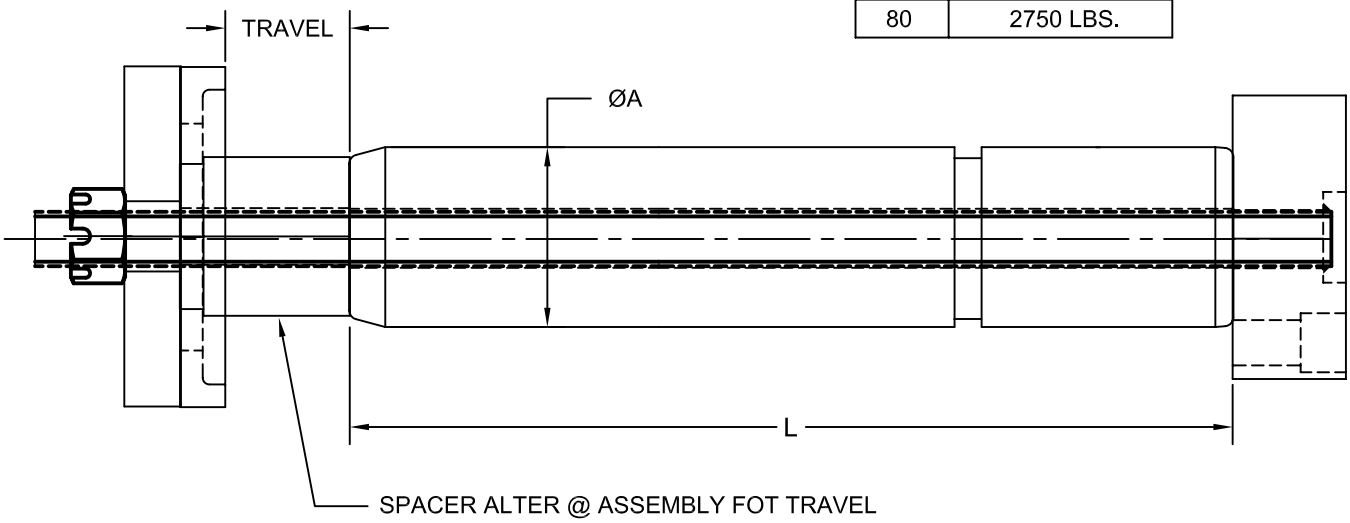

**** BUSHING IS NOT PART OF THIS ASSEMBLY AND MUST BE ORDER SEPARTELYIS SUPPLIED WITH THE BUSHING***

ØA DIM.	JOLICO NUMBER	CHRYSLER CC NUMBER	L DIM.	TRAVEL RANGE	THREAD SIZE X LENGHT
Ø50	J-118000-NB	19-010-7505	180	20 - 50	M20 X 350
	J-118001-NB	19-010-7507	200	40 - 70	M20 X 370
	J-118002-NB	19-010-7509	225	65 - 95	M20 X 395
	J-118003-NB	19-010-7512	250	90 - 120	M20 X 420
Ø63	J-118100-NB	19-010-7605	200	20 - 50	M24 X 380
	J-118101-NB	19-010-7607	225	40 - 75	M24 X 405
	J-118102-NB	19-010-7610	250	70 - 100	M24 X 430
	J-118103-NB	19-010-7613	280	100 - 130	M24 X 455
Ø80	J-118201-NB	19-010-7707	250	35 - 75	M30 X 440
	J-118202-NB	19-010-7710	280	65 - 105	M30 X 475
	J-118203-NB	19-010-7714	315	100 - 140	M30 X 500
	J-118204-NB	19-010-7718	355	140 - 180	M30 X 540

JOLICO J-B TOOL

PRINTED COPY IS UNCONTROLLED

BUFFER RETAINER PLATE AND SPACER

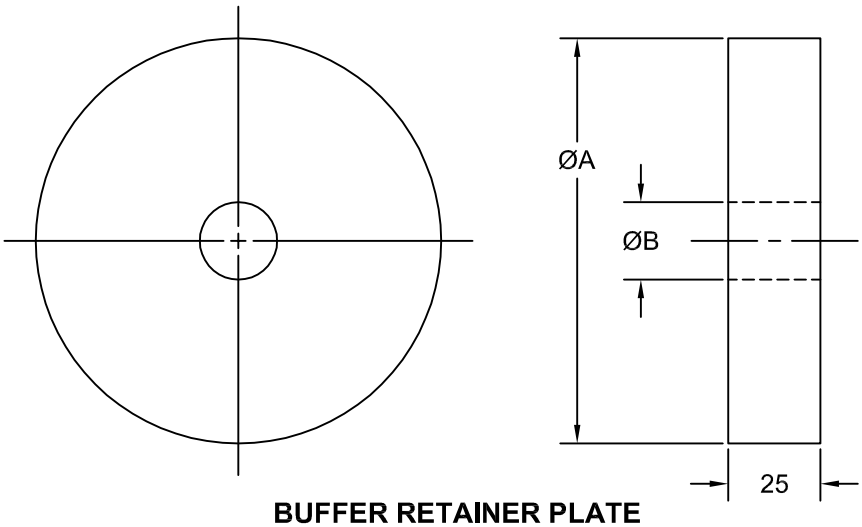

BUFFER RETAINER PLATE

GUIDE POST	JOLICO NUMBER	CHRYSLER CC NUMBER	ØA	ØB
Ø50	J-118554	19-010-5554	110	21
Ø63	J-118654	19-010-5654	125	25
Ø80	J-118754	19-010-5754	150	31

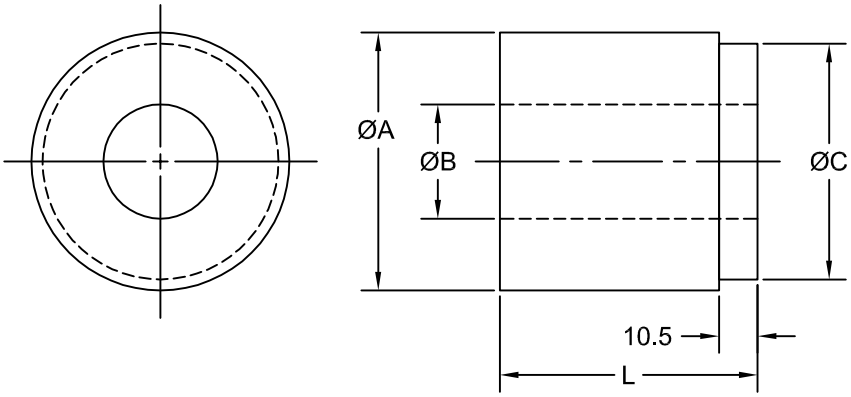

SPACER

GUIDE POST	JOLICO NUMBER	CHRYSLER CC NUMBER	L	ØA	ØB	ØC
Ø50	J-118552	19-010-5552	65	45	22	39
Ø63	J-118652	19-010-5652	75	50	25	44
Ø80	J-118752	19-010-5752	70	70	31	64

JOLICO J-B TOOL

PRINTED COPY IS UNCONTROLLED

RETAINER BLOCK AND POLYURETHANE BUFFER

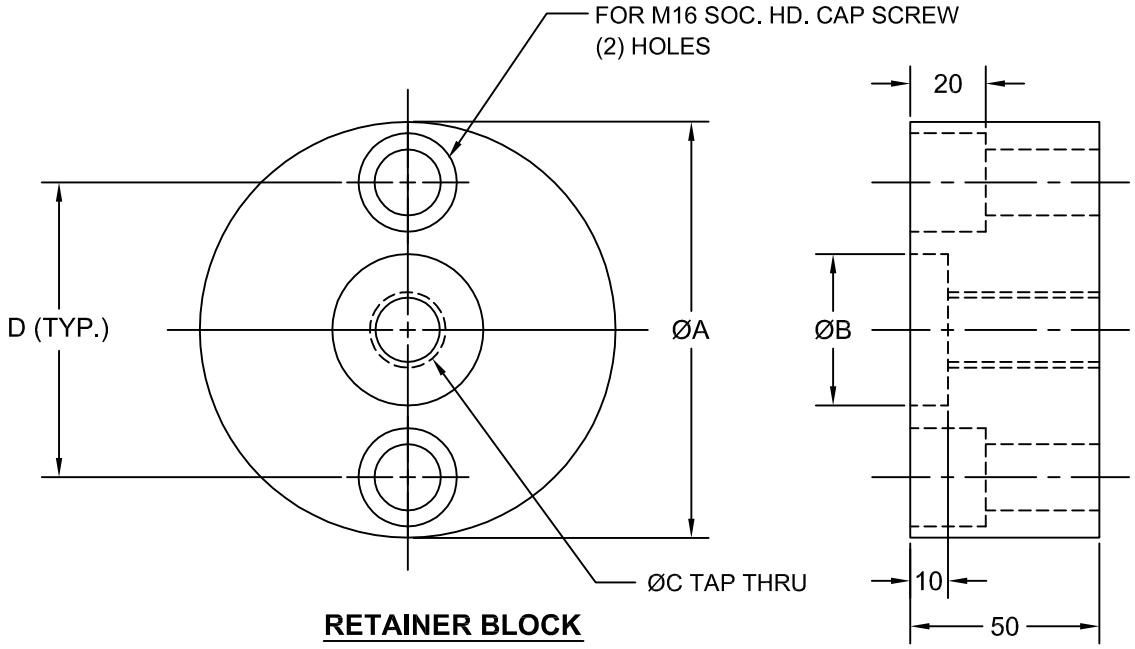

RETAINER BLOCK

GUIDE POST	JOLICO NUMBER	CHRYSLER CC NUMBER	ØA	ØB	ØC TAP	D
Ø50	J-118551	19-010-5551	110	40	M20	78
Ø63	J-118651	19-010-5651	125	40	M24	93
Ø80	J-118751	19-010-5751	150	50	M30	116

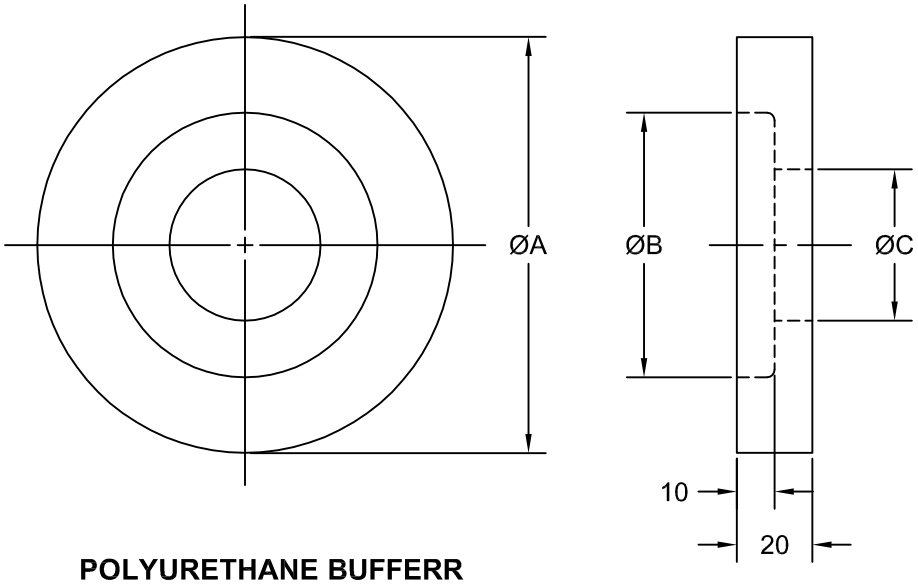

POLYURETHANE BUFFERR

GUIDE POST	JOLICO NUMBER	CHRYSLER CC NUMBER	ØA	ØB	ØC
Ø50	J-118553	19-010-5553	110	70	40
Ø63	J-118653	19-010-5653	125	85	45
Ø80	J-118753	19-010-5753	150	100	65

JOLICO J-B TOOL

PRINTED COPY IS UNCONTROLLED

LOCK DOWN GUIDE PIN ASSEMBLY

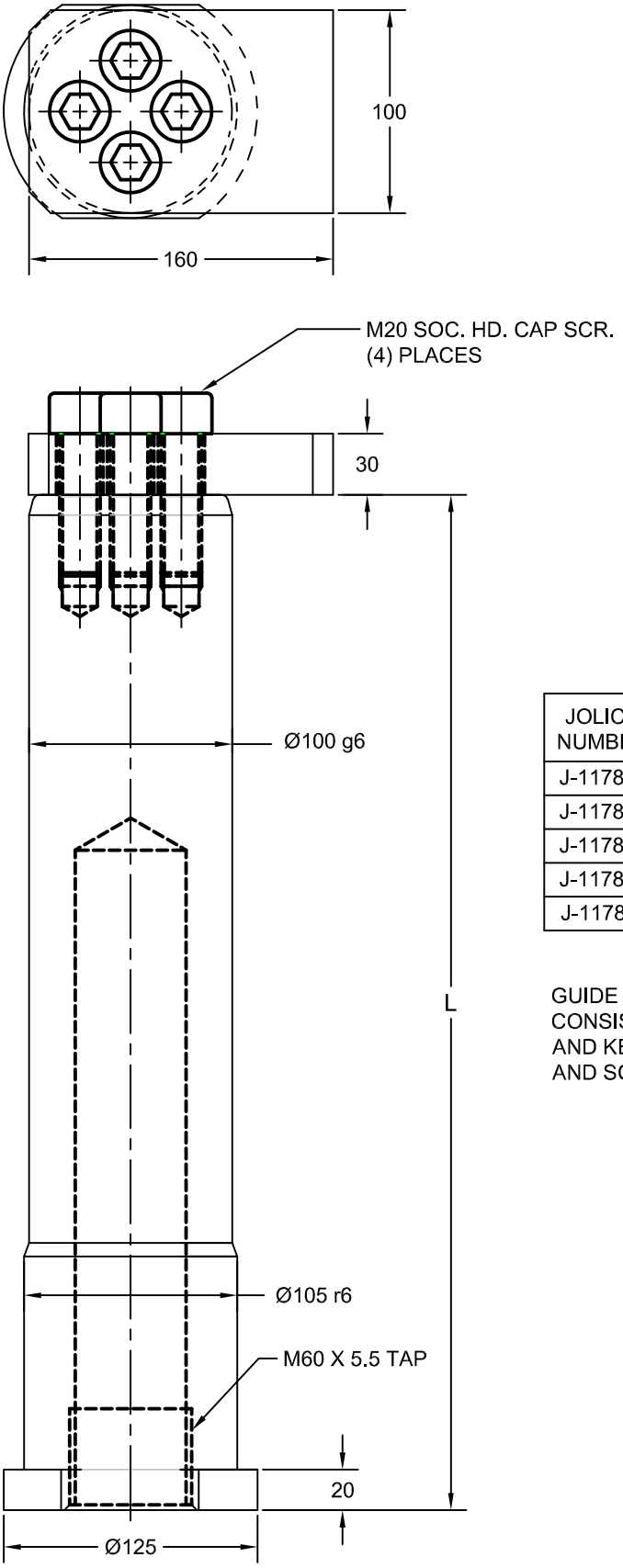

JOLICO NUMBER	CHRYSLER CC NUMBER	L DIM.
J-117850	19-245-8500	450
J-117856	19-245-8502	500
J-117857	19-245-8504	550
J-117860	19-245-8506	600
J-117861	19-245-8508	650

GUIDE PIN ASSEMBLY CONSISTS OF GUIDE PIN AND KEEPER PLATE DETAIL AND SCREWS

JOLICO J-B TOOL

PRINTED COPY IS UNCONTROLLED

LOCK DOWN GUIDE PIN DETAILS

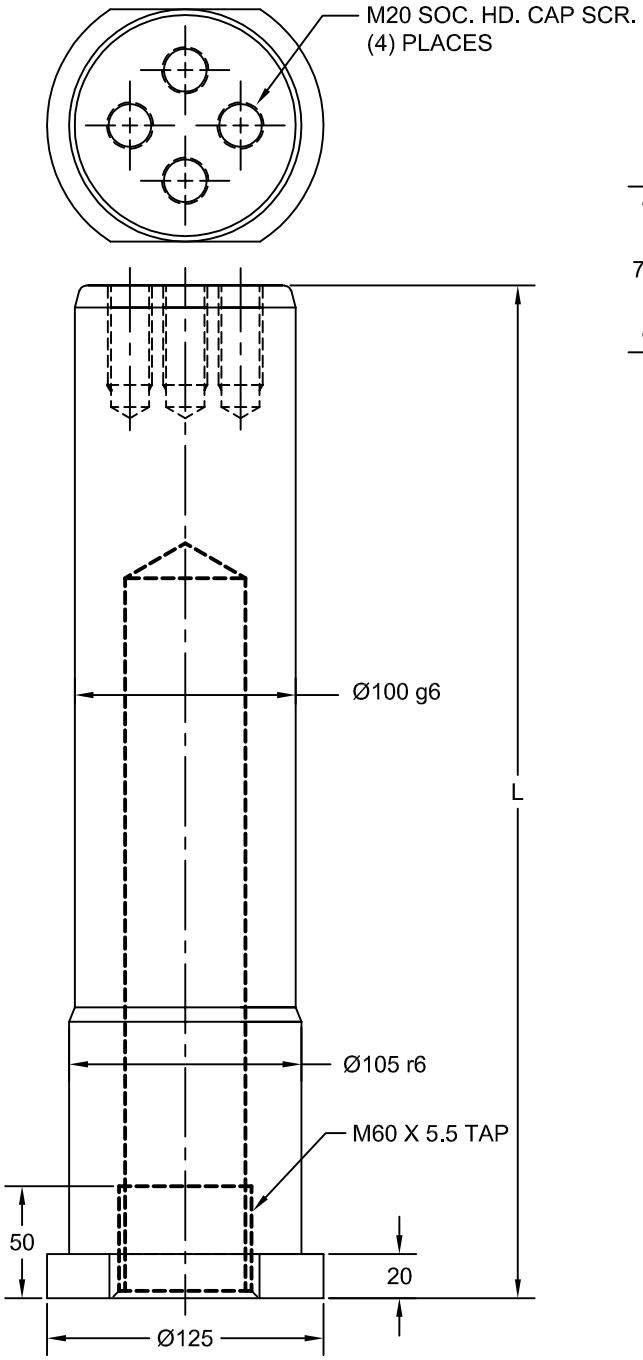

GUIDE PIN

JOLICO NUMBER	CHRYSLER CC NUMBER	L DIM.
J-117884	19-245-0040	450
J-117885	19-245-0041	500
J-117880	19-245-0017	550
J-117883	19-245-0021	600
J-117882	19-245-0019	650

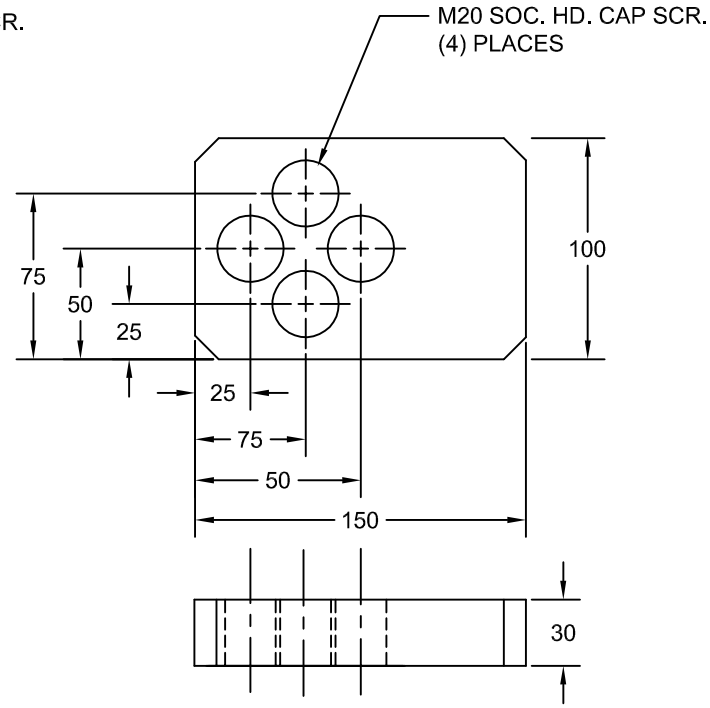

KEEPER BLOCK

JOLICO NUMBER	CHRYSLER CC NUMBER
J-117852	19-245-8512

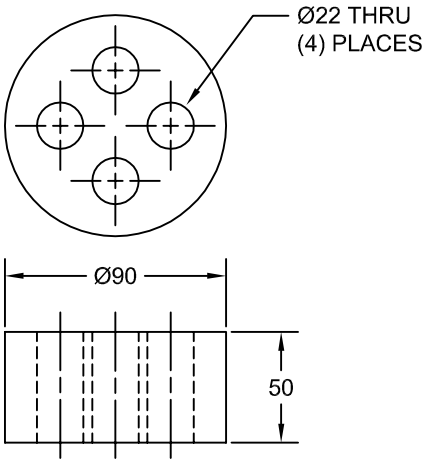

SPACER

JOLICO NUMBER	CHRYSLER CC NUMBER
J-117853	19-245-8511

JOLICO J-B TOOL

PRINTED COPY IS UNCONTROLLED

GUIDE POST Ø25 THRU Ø63 (f6)

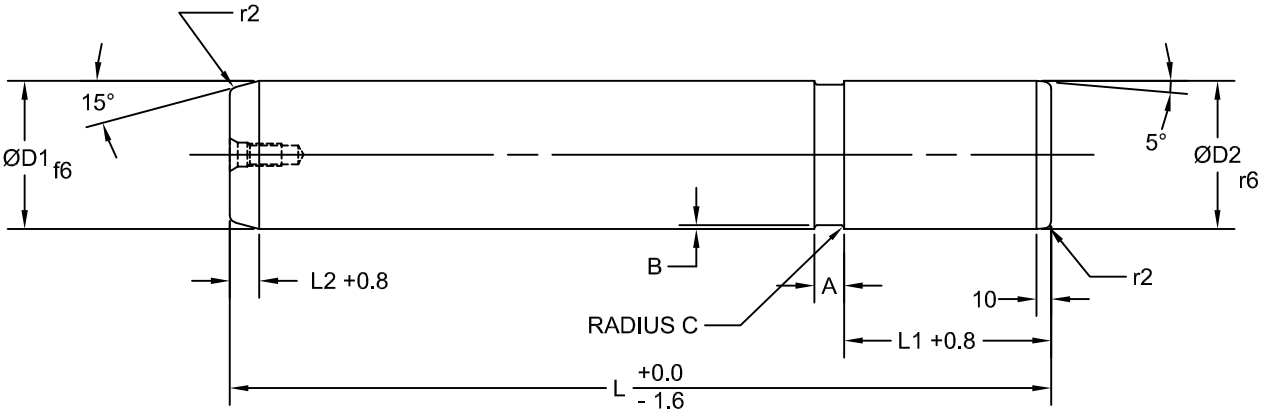

ØD1	JOLICO NUMBER	CHRYSLER CC NUMBER	L	ØD2	L1	L2	r2	A ±0.2	B ±0.2	C
25	J-118297	19-245-7777	100	25	40	4	2.0	6.0	2.5	1.0
	J-118300	19-245-6404	125							
	J-118301	19-245-6405	140							
	J-118304	19-245-6406	160							
	J-118308	19-245-6407	180							
32	J-118298	19-245-6502	100	32	45	8	2.0	6.0	2.5	1.0
	J-118299	19-245-6504	125							
	J-118302	19-245-6505	140							
	J-118305	19-245-6506	160							
	J-118309	19-245-6507	180							
	J-118313	19-245-6508	200							
40	J-118306	19-245-6606	160	40	56	10	2.0	9.0	3.5	1.5
	J-118310	19-245-6607	180							
	J-118314	19-245-6608	200							
	J-118317	19-245-6609	225							
	J-118321	19-245-6610	250							
50	J-118307	19-245-6806	160	50	70	10	2.5	9.0	3.5	1.5
	J-118311	19-245-6807	180							
	J-118315	19-245-6808	200							
	J-118318	19-245-6809	225							
	J-118322	19-245-6810	250							
	J-118327	19-245-6811	280							
63	J-118323	19-245-7010	250	63	80	10	2.5	11.0	5.5	2.0
	J-118328	19-245-7011	280							
	J-118332	19-245-7012	315							
	J-118337	19-245-7014	355							
	J-118341	19-245-7016	400							

JOLICO J-B TOOL

PRINTED COPY IS UNCONTROLLED

GUIDE POST Ø80 THRU Ø125 (f6)

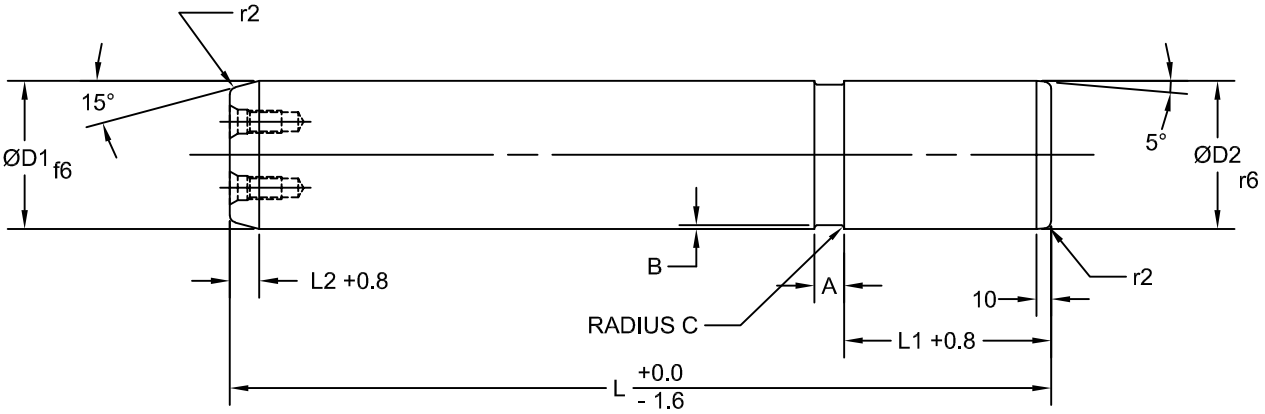

ØD1	JOLICO NUMBER	CHRYSLER CC NUMBER	L	ØD2	L1	L2	r2	A ±0.2	B ±0.2	C
80	J-118324	19-245-7210	250	80	100	10	3.0	11.0	5.5	2.0
	J-118329	19-245-7211	280							
	J-118333	19-245-7212	315							
	J-118338	19-245-7214	355							
	J-118342	19-245-7216	400							
100	J-118334	19-245-7412	315	100	125	10	3.0	11.0	5.5	2.0
	J-118339	19-245-7414	355							
	J-118343	19-245-7416	400							
	J-118347	19-245-7418	450							
	J-118351	19-245-7420	500							
125	J-118340	19-245-0044	355	125	140	12	4.0	11.0	5.5	2.0
	J-118344	19-245-7816	400							
	J-118348	19-245-7818	450							
	J-118352	19-245-7820	500							
	J-118354	19-245-7822	550							

JOLICO J-B TOOL

PRINTED COPY IS UNCONTROLLED

HOLLOW GUIDE POST Ø80 THRU Ø125 (f6)

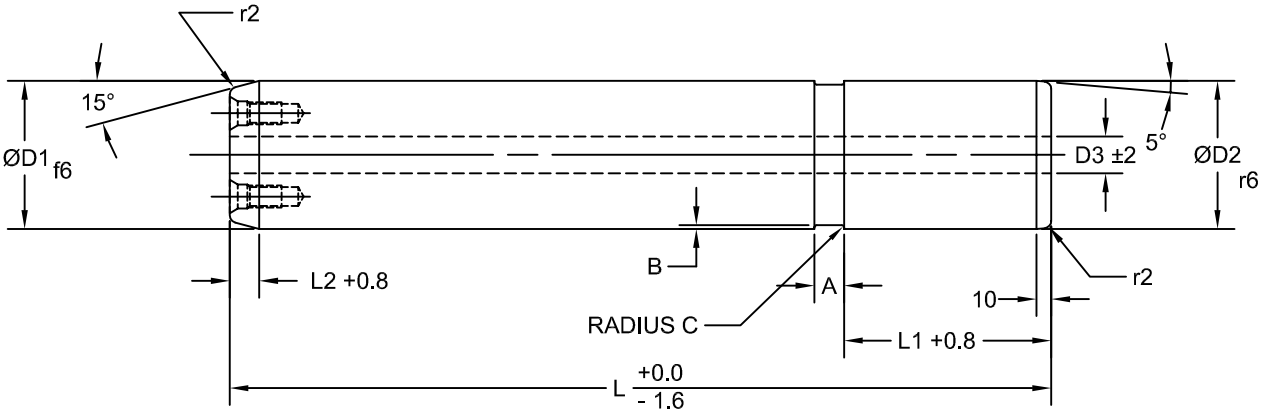

ØD1	JOLICO NUMBER	CHRYSLER CC NUMBER	L	ØD2	ØD3	L1	L2	r2	A ±0.2	B ±0.2	C
80	J-117180	19-245-0034	250	80	40	100	10	3.0	11.0	5.5	2.0
	J-117181	19-245-0033	280								
	J-117182	19-245-0032	315								
	J-117183	19-245-0031	355								
	J-117184	19-245-0030	400								
100	J-117185	19-245-0029	315	100	50	125	10	3.0	11.0	5.5	2.0
	J-117186	19-245-0028	355								
	J-117187	19-245-0027	400								
	J-117188	19-245-0026	450								
	J-117189	19-245-0025	500								
	J-117190	19-245-0023	550								
125	J-117191	19-245-0039	355	125	65	140	12	4.0	11.0	5.5	2.0
	J-117192	19-245-0038	400								
	J-117193	19-245-0037	450								
	J-117194	19-245-0036	500								
	J-117195	19-245-0035	550								

JOLICO J-B TOOL

PRINTED COPY IS UNCONTROLLED

SHOULDER GUIDE POST (f6)

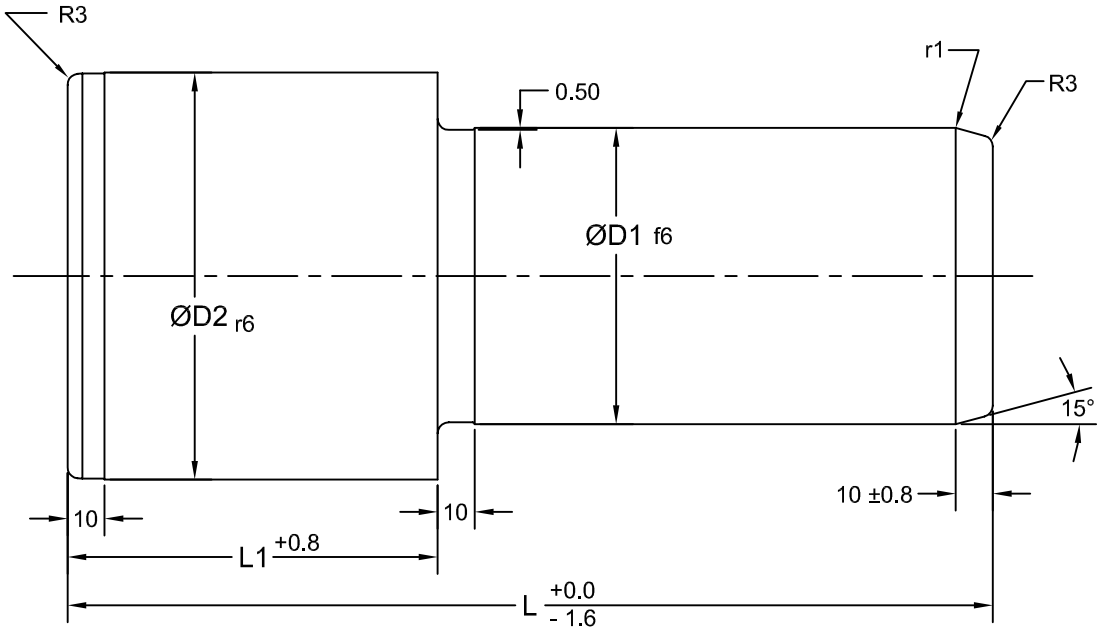

ØD1	JOLICO NUMBER	CHRYSLER CC NUMBER	L	ØD2	L1	r1
80	J-118400	19-245-0046	250	110	100	8
	J-118401	19-245-0047	280			
	J-118402	19-245-0048	315			
	J-118403	19-245-0049	355			
	J-118404	19-245-0050	400			
	J-118405	19-245-0051	450			
	J-118406	19-245-0060	500			
	J-118407	19-245-0061	550			
100	J-118410	19-245-0052	250	130	125	10
	J-118411	19-245-0053	280			
	J-118412	19-245-0054	315			
	J-118413	19-245-0055	355			
	J-118414	19-245-0056	400			
	J-118415	19-245-0057	450			
	J-118416	19-245-0058	500			
	J-118417	19-245-0059	550			

JOLICO J-B TOOL

PRINTED COPY IS UNCONTROLLED

STOP / BUSHING CLAMP COMBINATION BLOCK AND STOP / GUIDE PIN RETAINER COMBINATION BLOCK

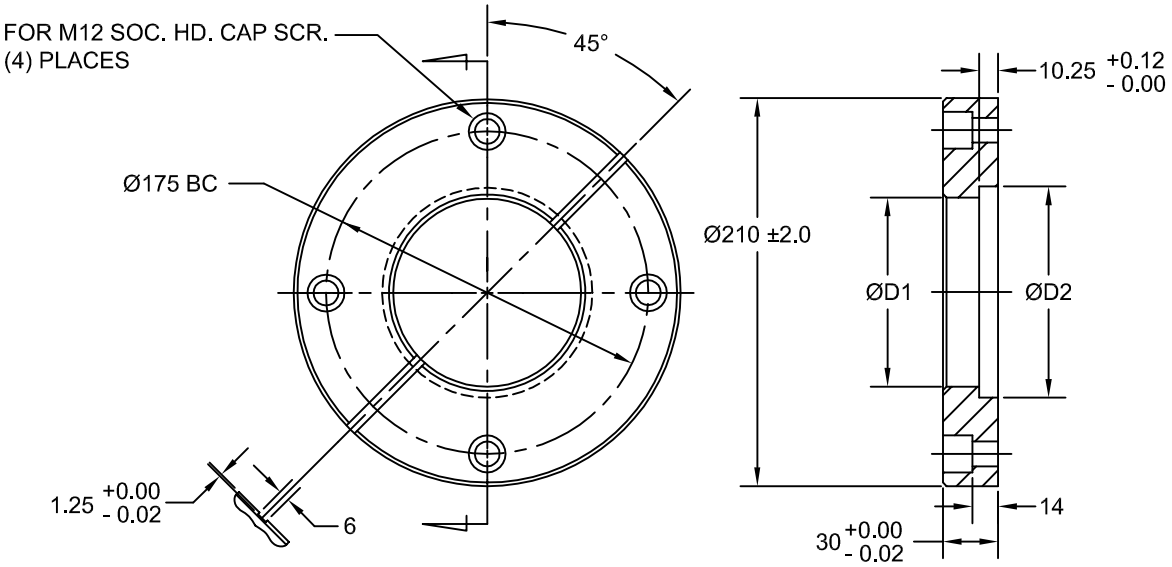

STOP / BUSHING CLAMP COMBINATION BLOCK

BUSHING I. D.	JOLICO NUMBER	CHRYSLER CC NUMBER	ØD1 DIM.	ØD2 DIM.
80	J-228550	19-010-0200	102	114
100	J-228551	19-010-0201	127	142

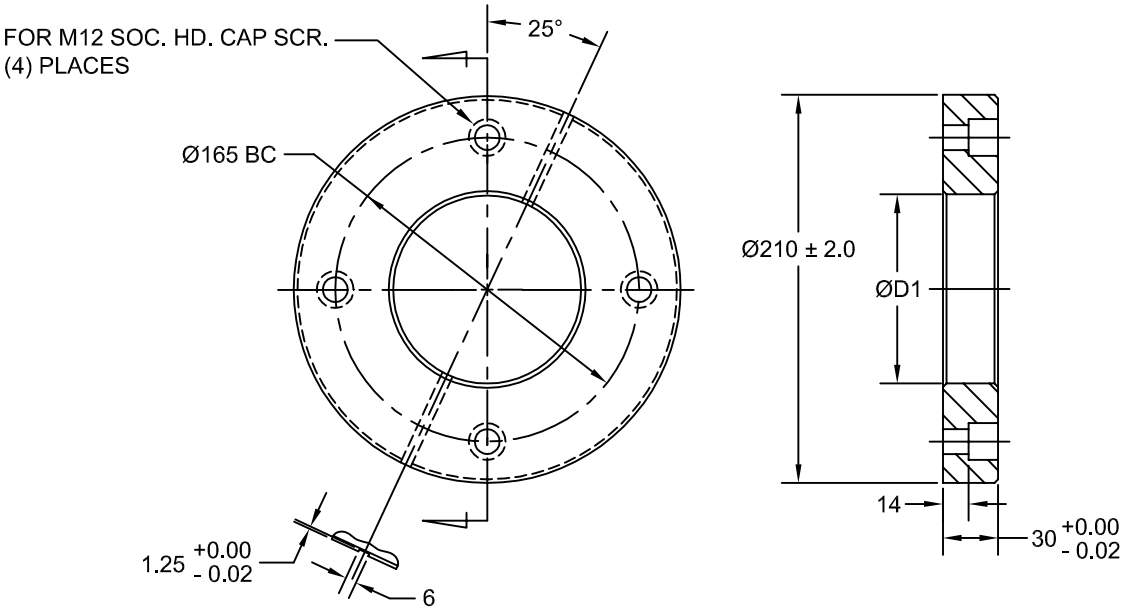

STOP / GUIDE PIN RETAINER COMBINATION BLOCK

BUSHING I. D.	JOLICO NUMBER	CHRYSLER CC NUMBER	ØD1 DIM.
80	J-228552	19-010-0202	84
100	J-228553	19-010-0203	104

JOLICO J-B TOOL

PRINTED COPY IS UNCONTROLLED

STOP BLOCK AND STOP BLOCK DIE SPACER

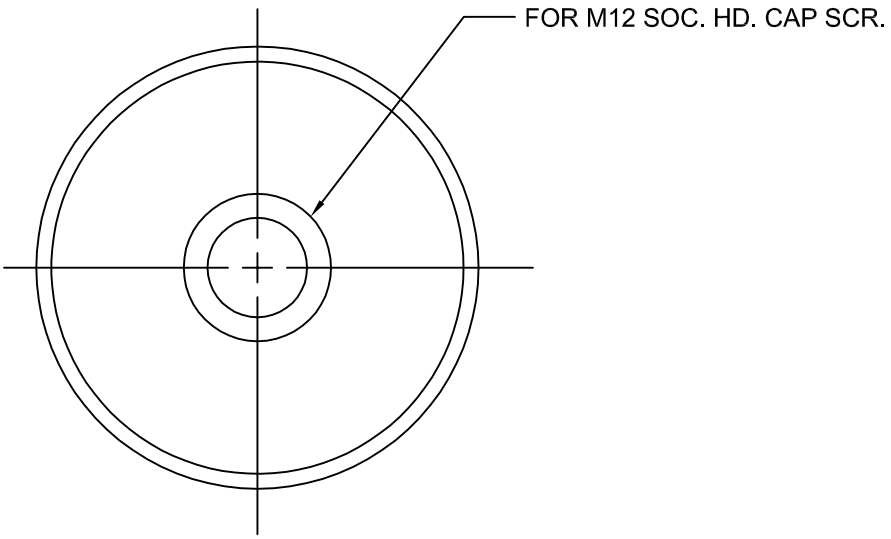

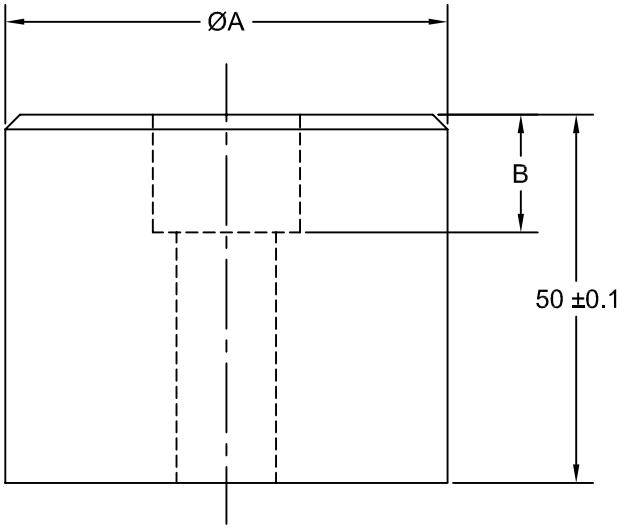

JOLICO NUMBER	CHRYSLER CC NUMBER	ØA	B
J-228403	19-010-2102	60	16
J-228540	19-010-0102	50	25
J-228541	19-010-0103	90	30

JOLICO J-B TOOL

KEEPER PLATE

PRINTED COPY IS UNCONTROLLED

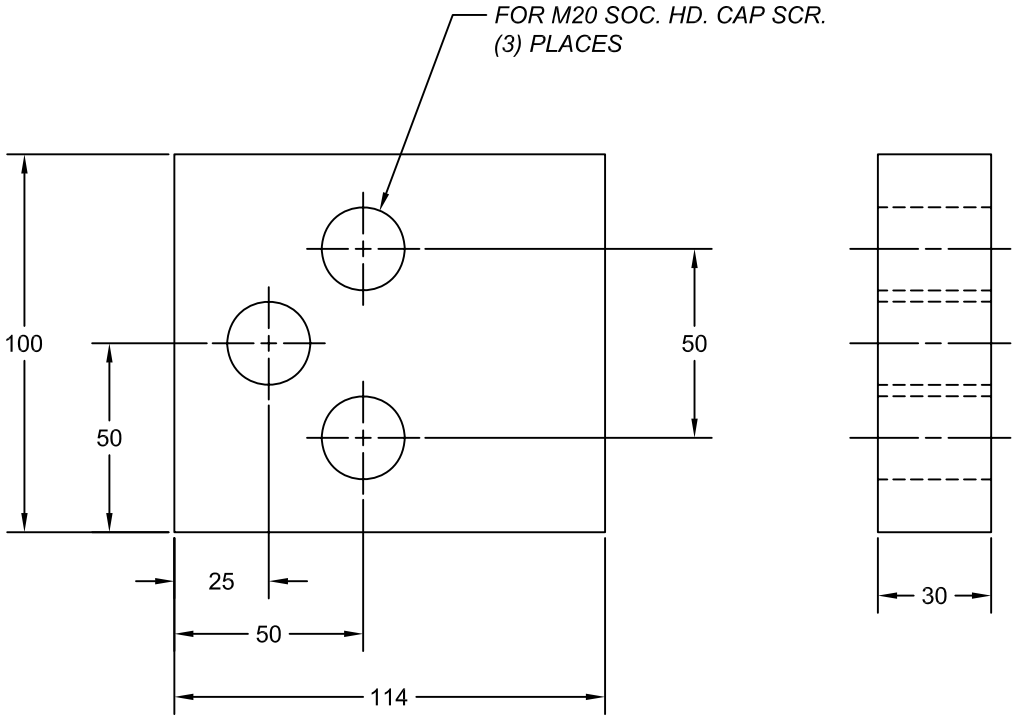

JOLICO NUMBER	CHRYSLER CC NUMBER
J-117870	19-010-0075

JOLICO J-B TOOL

PRINTED COPY IS UNCONTROLLED

M24 AUXILIARY RETENTION BOLT ASSEMBLY

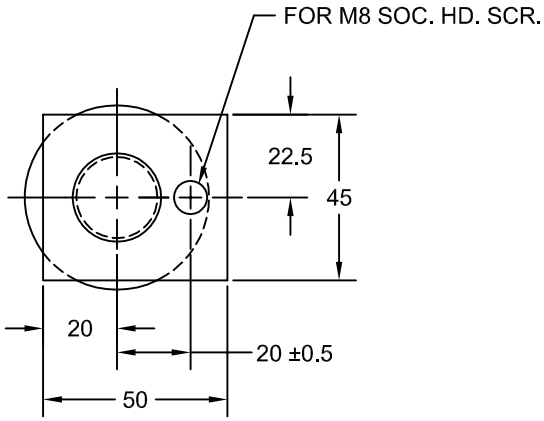

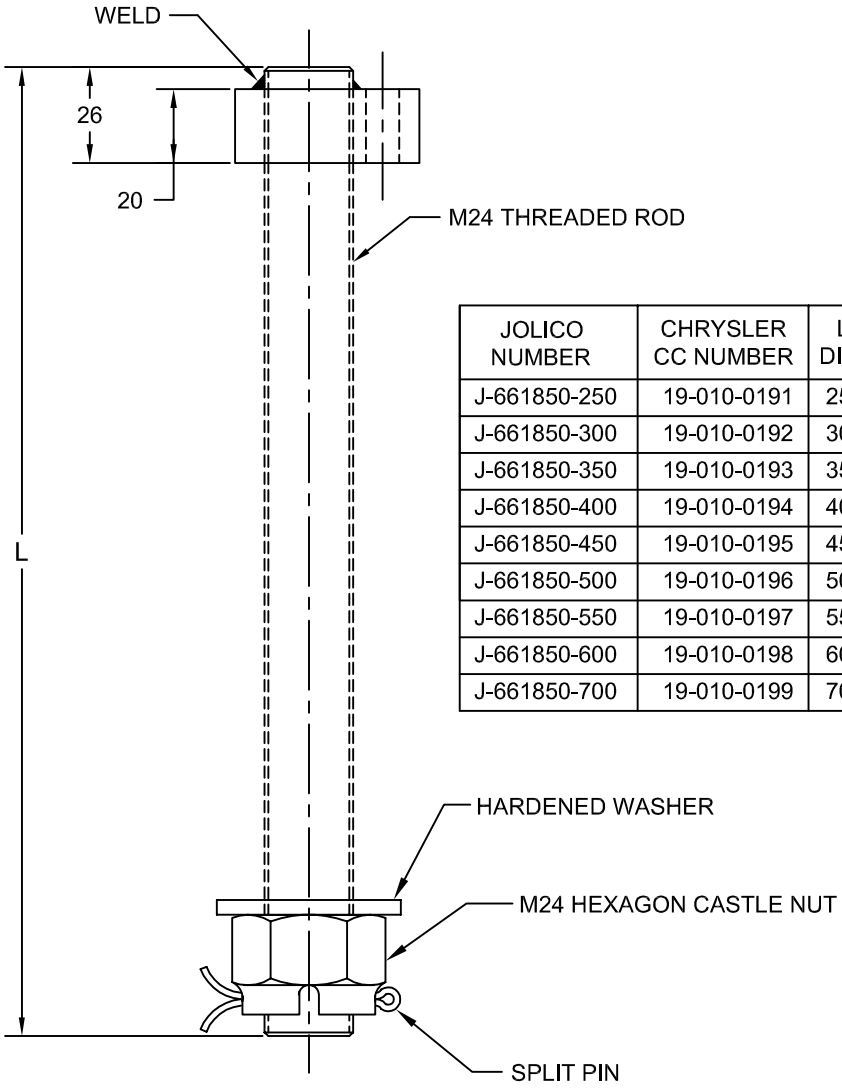

JOLICO NUMBER	CHRYSLER CC NUMBER	L DIM.
J-661850-250	19-010-0191	250
J-661850-300	19-010-0192	300
J-661850-350	19-010-0193	350
J-661850-400	19-010-0194	400
J-661850-450	19-010-0195	450
J-661850-500	19-010-0196	500
J-661850-550	19-010-0197	550
J-661850-600	19-010-0198	600
J-661850-700	19-010-0199	700

JOLICO J-B TOOL

PRINTED COPY IS UNCONTROLLED

POST BUSHING CLAMP
AND GUIDE PIN RETAINER PLATE

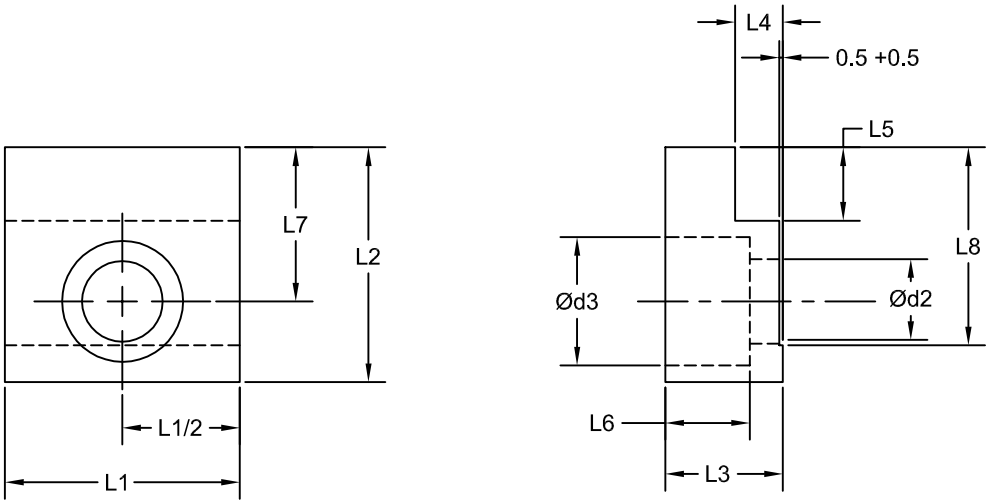

POST BUSHING CLAMP

BUSHING O. D.	JOLICO NUMBER	CHRYSLER CC NUMBER	L1	L2	L3	L4	L5	L6	L7	L8	Ød2	Ød3
25 THRU 50	J-112048	19-010-0106	20	20	10	6.3	5	7	12.5	16	7	11
63 THRU 125	J-112049	19-010-0105	32	32	16	10	10	11.5	21	27	12	17

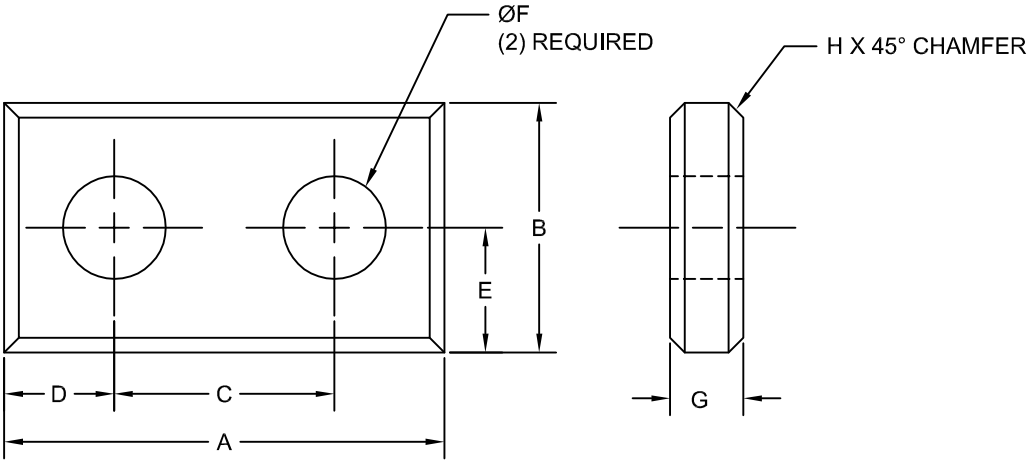

GUIDE PIN RETAINER PLATE

JOLICO NUMBER	CHRYSLER CC NUMBER	GUIDE POST O. D.	A	B	C	D	E	ØF	G	H
J-118360	19-010-0204	25 & 32	40	20	20	10	10.0	9	5	1.0
J-118361	19-010-0205	40 & 50	48	25	24	12	12.5	11	8	1.5
J-118362	19-010-0206	63, 80, 100	60	34	30	15	17.0	14	10	2.0
J-118363	19-010-0251	125	80	57	50	15	37.0	14	10	2.0

JOLICO J-B TOOL

PRINTED COPY IS UNCONTROLLED

DRAW DIE RAMP GAGE

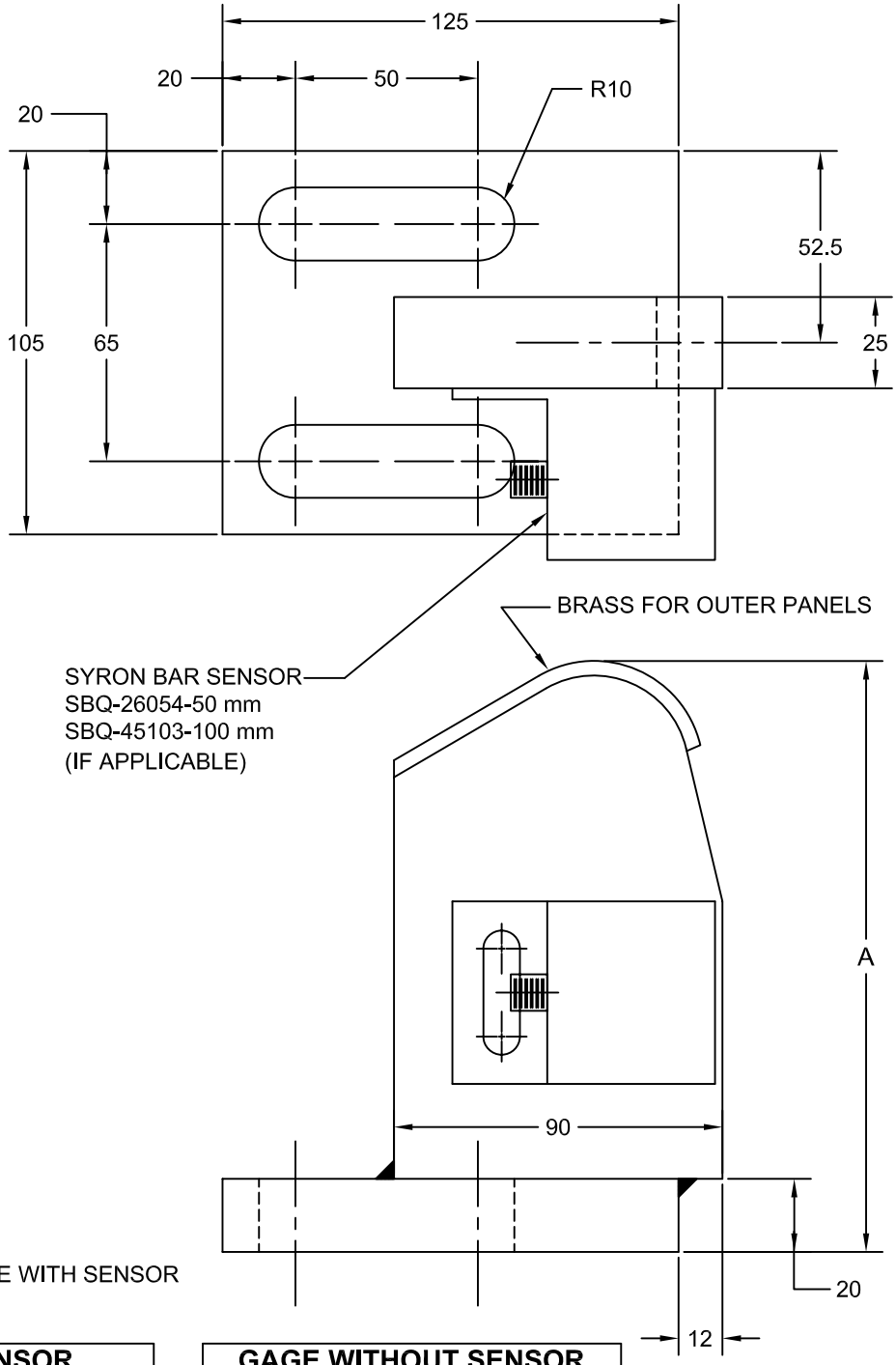

ORDERING EXAMPLE:
J - 777515 - S
GAGE WITH SENSOR

GAGE WITH SENSOR		
JOLICO NUMBER	CHRYSLER CC NUMBER	A DIM.
J-777514-S	19-010-1417	170
J-777515-S	19-010-1419	195
J-777516-S	19-010-1422	220
J-777517-S	19-010-1424	245

GAGE WITHOUT SENSOR		
JOLICO NUMBER	CHRYSLER CC NUMBER	A DIM.
J-777512	19-010-1312	120
J-777513	19-010-1314	145
J-777514	19-010-1317	170
J-777515	19-010-1319	195
J-777516	19-010-1322	220
J-777517	19-010-1324	245

JOLICO J-B TOOL

PRINTED COPY IS UNCONTROLLED

TRIM TAB PILOT GAGE

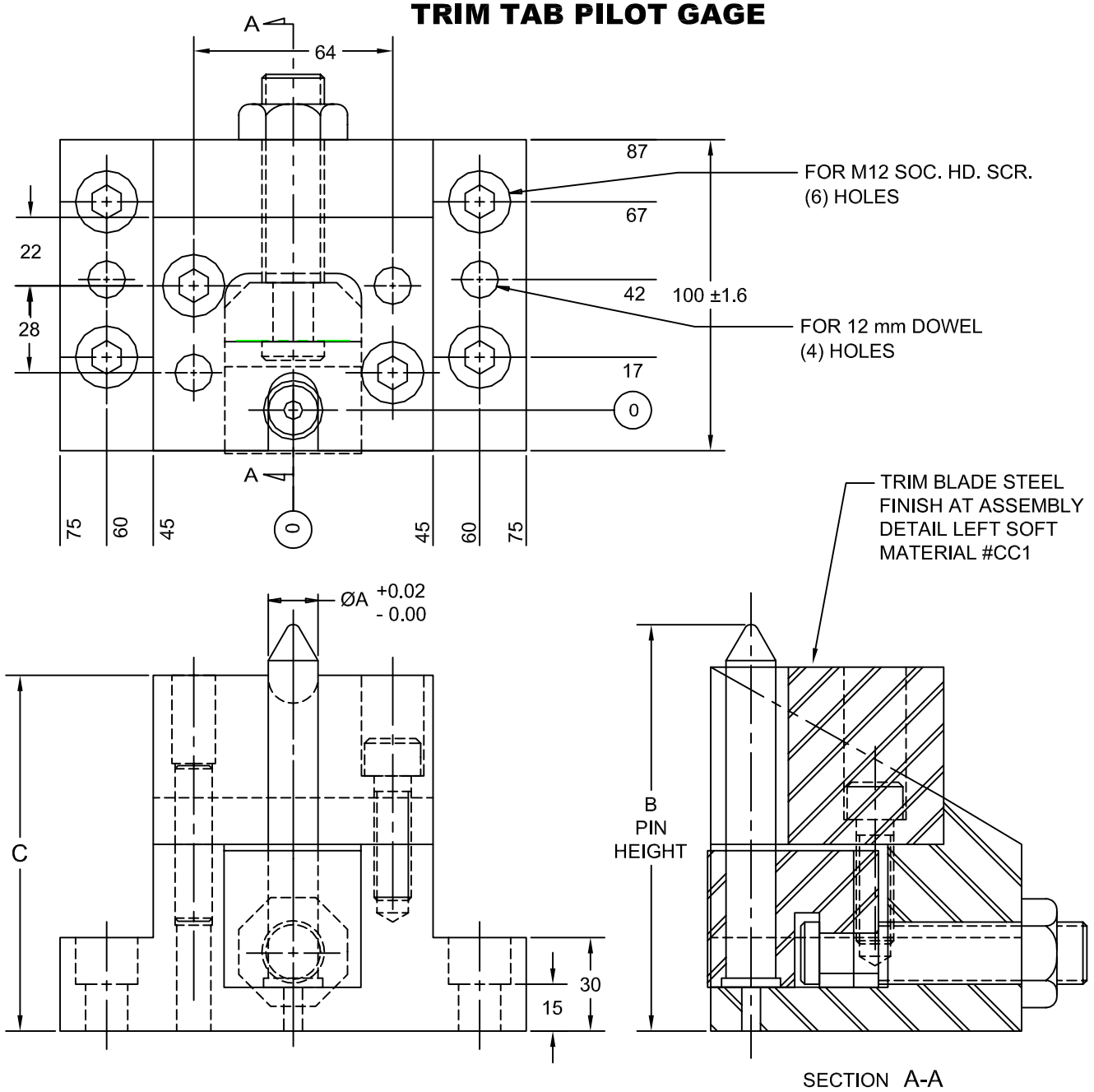

JOLICO NUMBER	CHRYSLER CC NUMBER	ØA PIN	PILOT	" B" PIN HEIGHT	" C"
J - 441011	19-235-0014	12.75	13	130	117
J - 441040	19-235-1814	12.75	13	150	137
J - 441043	19-235-1914	12.75	13	170	157
J - 441046	19-235-2014	12.75	13	190	177
J - 441012	19-235-0015	15.75	16	130	117
J - 441041	19-235-1815	15.75	16	150	137
J - 441044	19-235-1915	15.75	16	170	157
J - 441047	19-235-2015	15.75	16	190	177

JOLICO NUMBER	CHRYSLER CC NUMBER	ØA PIN	PILOT	" B" PIN HEIGHT	" C"
J - 441013	19-235-0016	19.75	20	130	117
J - 441042	19-235-1816	19.75	20	150	137
J - 441045	19-235-1916	19.75	20	170	157
J - 441048	19-235-2016	19.75	20	190	177

JOLICO J-B TOOL

PRINTED COPY IS UNCONTROLLED

ROTARY FLIPPER GAGE ARM

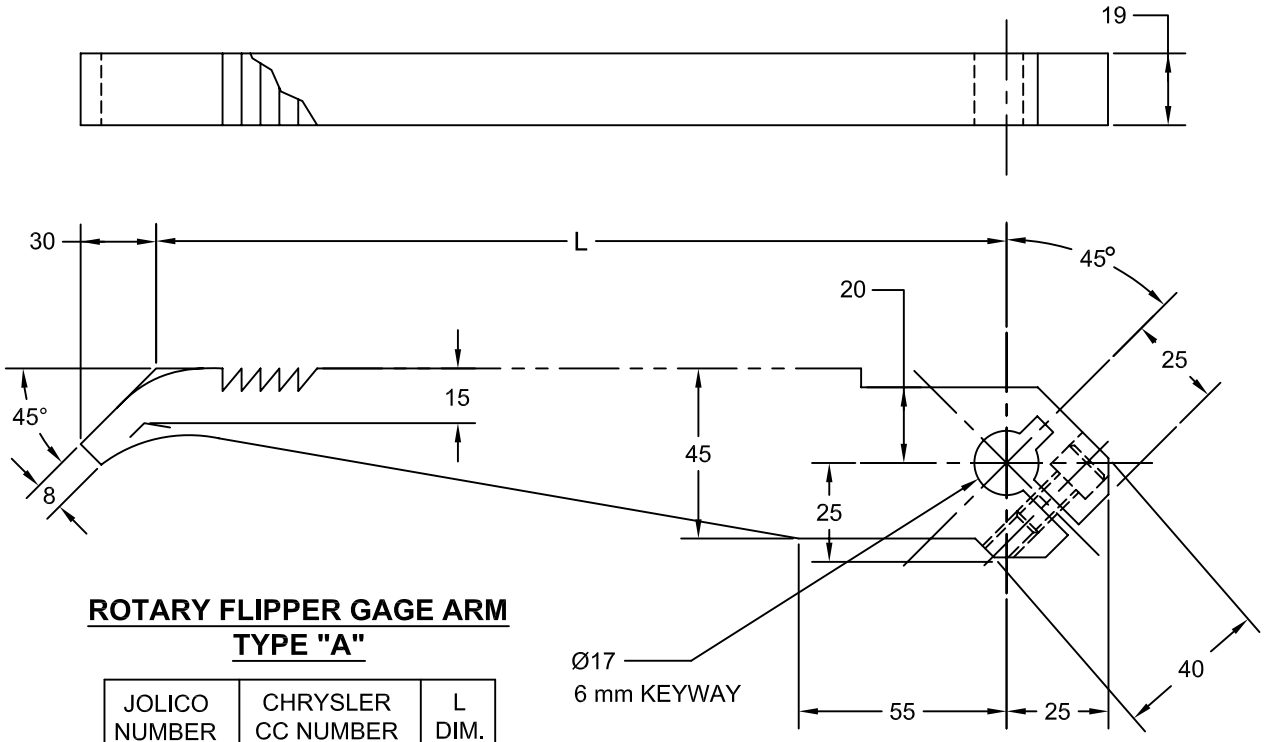

ROTARY FLIPPER GAGE ARM TYPE "A"

JOLICO NUMBER	CHRYSLER CC NUMBER	L DIM.
J-441287	19-010-1122	225
J-441288	19-010-1131	315
J-441289	19-010-1136	365
J-441290	19-010-1141	415

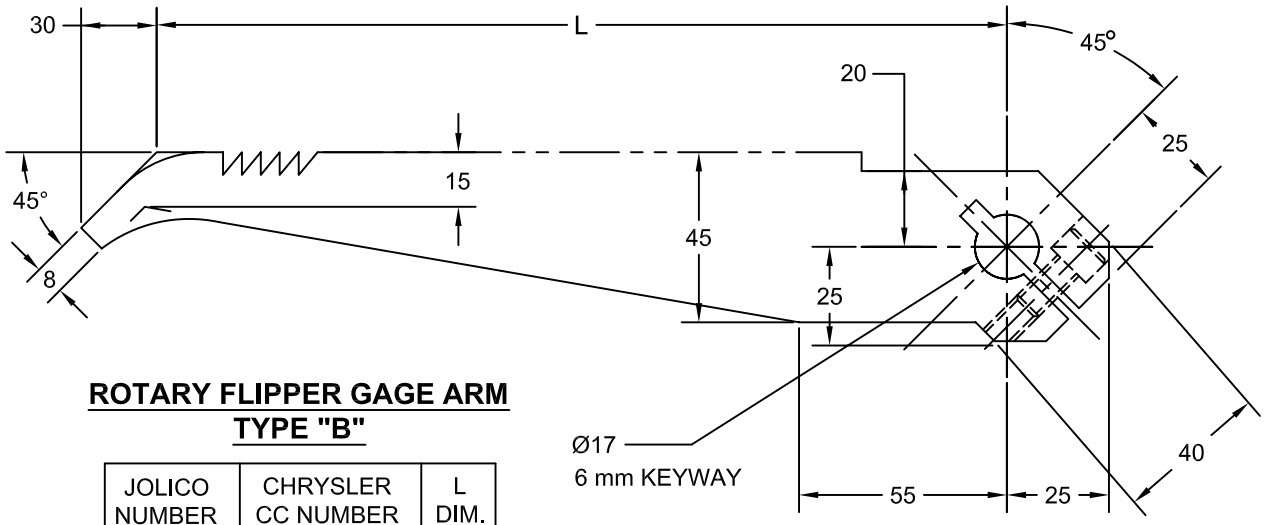

ROTARY FLIPPER GAGE ARM TYPE "B"

JOLICO NUMBER	CHRYSLER CC NUMBER	L DIM.
J-441291	19-010-1222	225
J-441292	19-010-1231	315
J-441293	19-010-1236	365
J-441294	19-010-1241	415

JOLICO J-B TOOL

PRINTED COPY IS UNCONTROLLED

DISAPPEARING GAGE

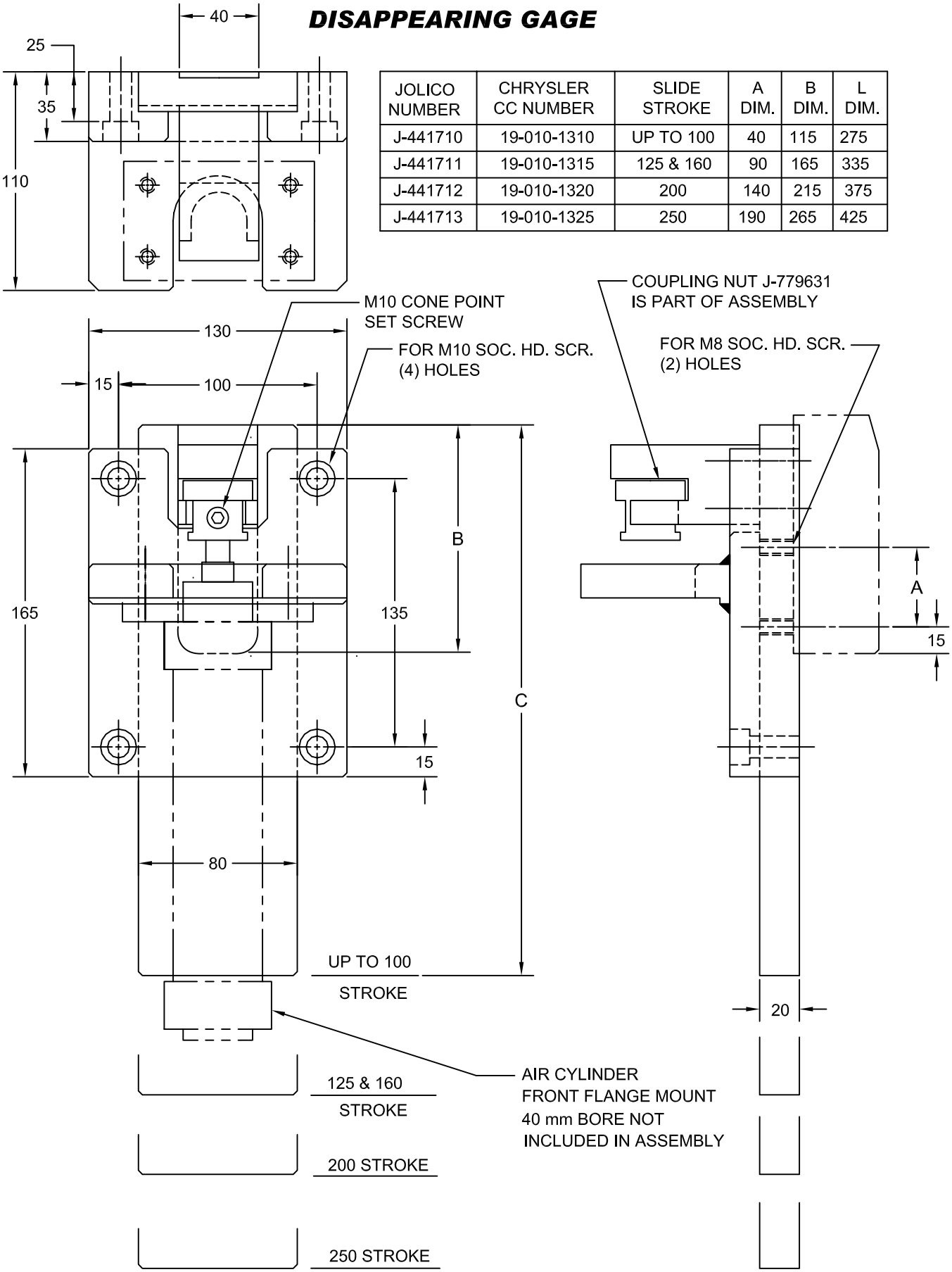

JOLICO NUMBER	CHRYSLER CC NUMBER	SLIDE STROKE	A DIM.	B DIM.	L DIM.
J-441710	19-010-1310	UP TO 100	40	115	275
J-441711	19-010-1315	125 & 160	90	165	335
J-441712	19-010-1320	200	140	215	375
J-441713	19-010-1325	250	190	265	425

JOLICO J-B TOOL

PRINTED COPY IS UNCONTROLLED

RAMP GAGE

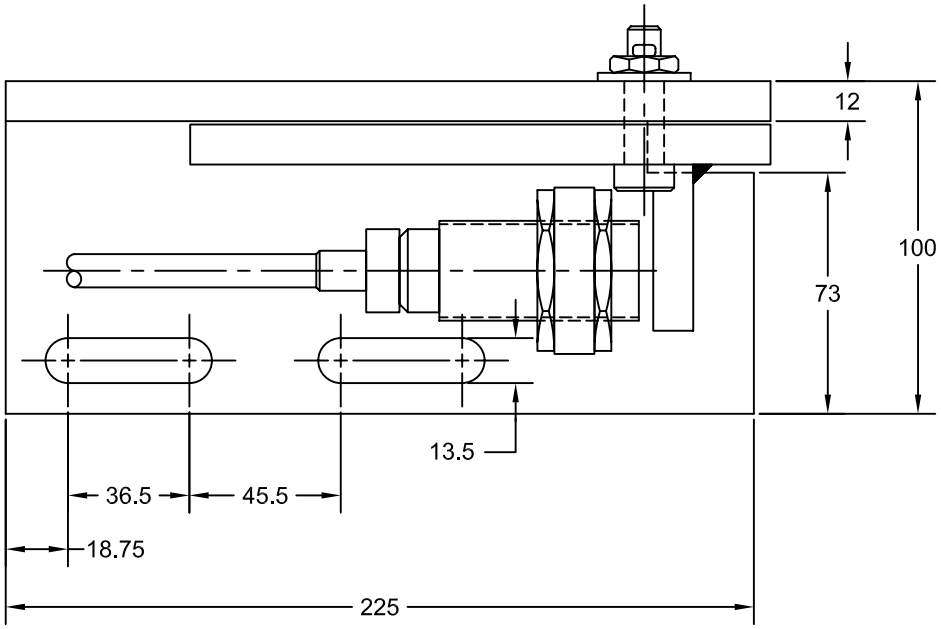

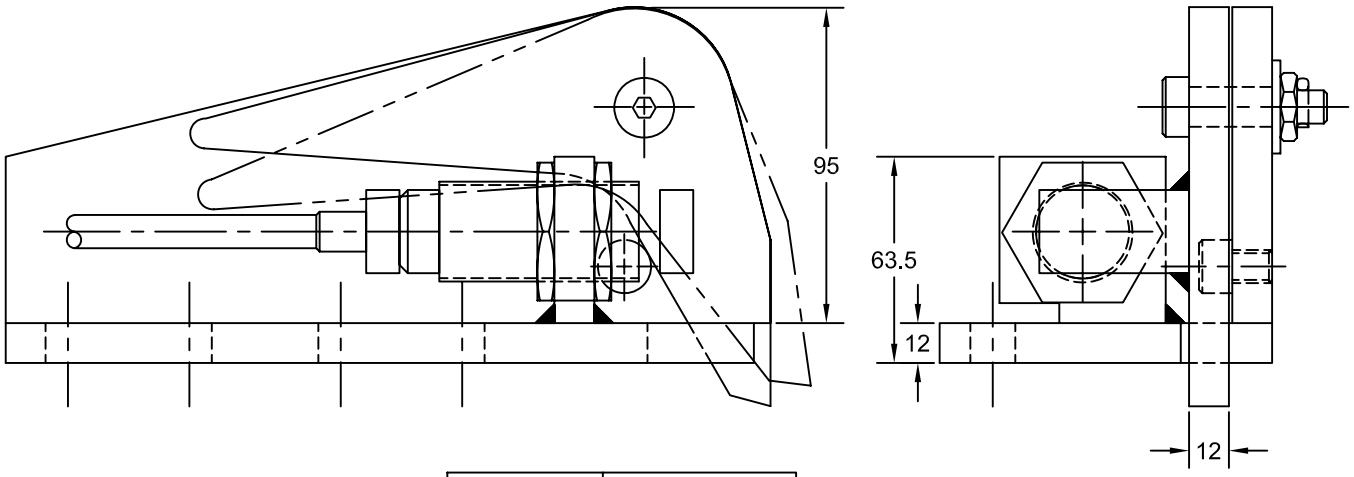

JOLICO NUMBER	CHRYSLER CC NUMBER
J-777850	19-010-1450

RAMP GAGE INCLUDES

(1) PROXIMITY SENSOR SWITCH
(1) TWENTY FEET OF SWITCH CABLE
(2) 13 mm I.D. FLAT WASHER
(2) M12 SOC. HD. SCR.

JOLICO J-B TOOL

PRINTED COPY IS UNCONTROLLED

COMBINATION FRONT GAGE WITH PROXIMITY SENSOR

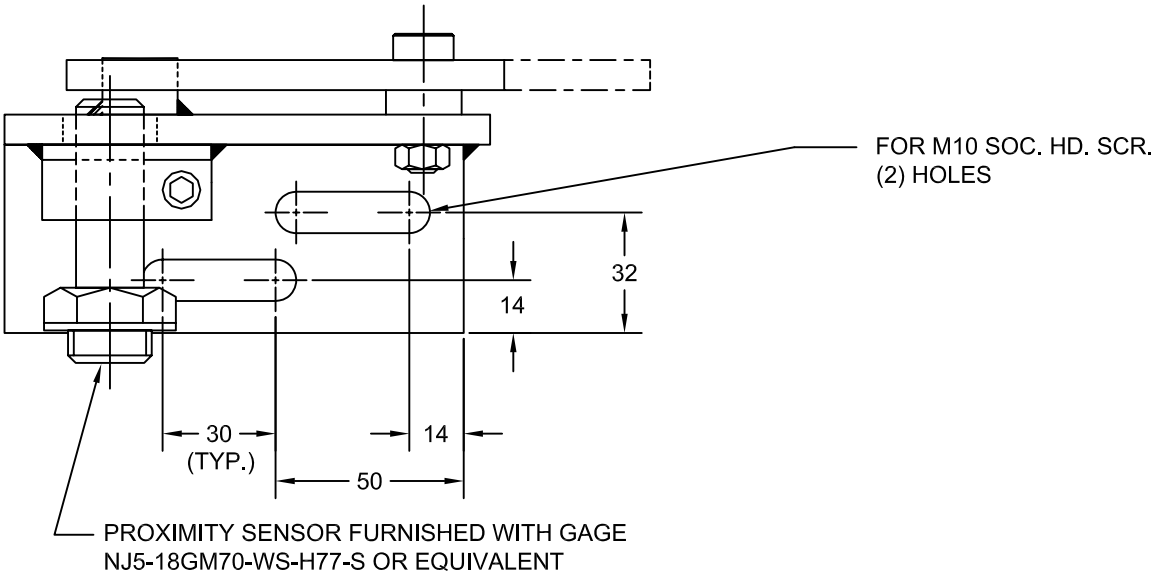

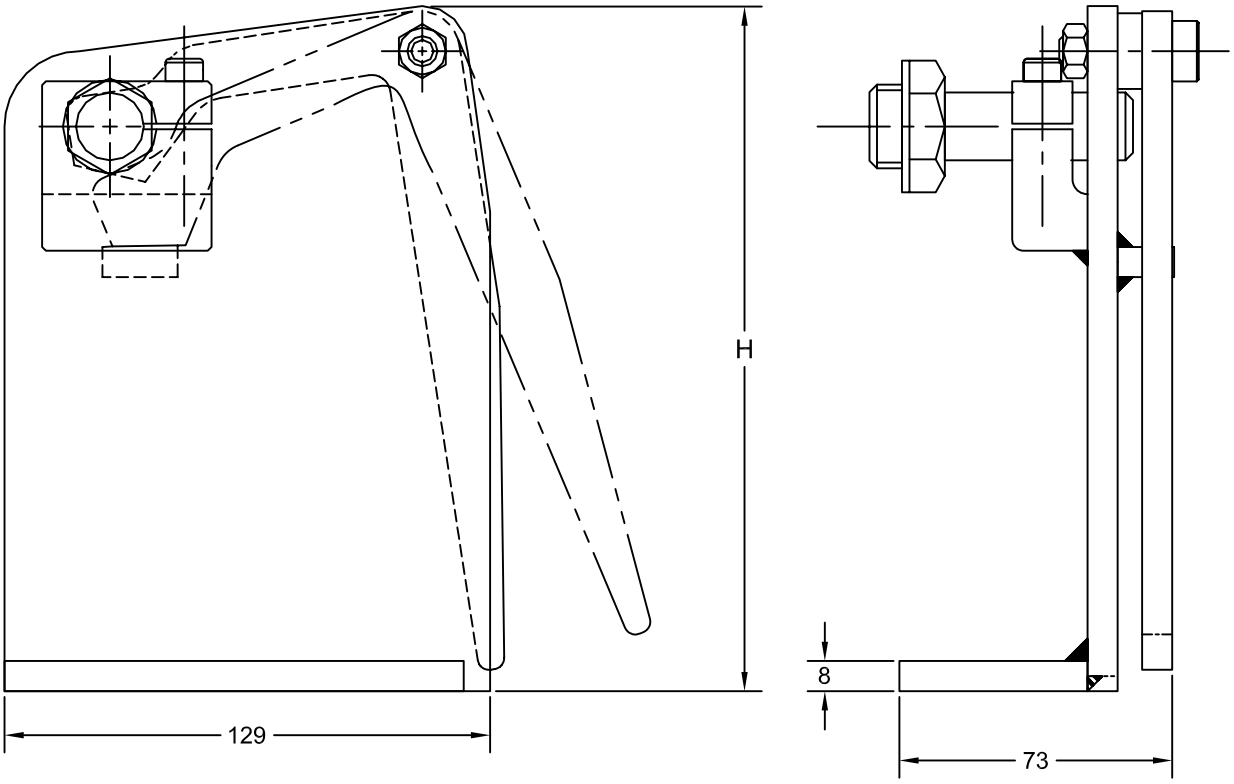

	SHOWN		SYM. OPPOSITE	
H DIM.	JOLICO NUMBER	CHRYSLER CC NUMBER	JOLICO NUMBER	CHRYSLER CC NUMBER
80	J-777503	19-010-1508	J-777502	19-010-1608
107	J-777505	19-010-1510	J-777504	19-010-1610
132	J-777507	19-010-1513	J-777506	19-010-1613
157	J-777509	19-010-1515	J-777508	19-010-1615
182	J-777511	19-010-1518	J-777510	19-010-1618

JOLICO J-B TOOL

PRINTED COPY IS UNCONTROLLED

FLAT BLANK SWEEP GAGE WITH SENSOR

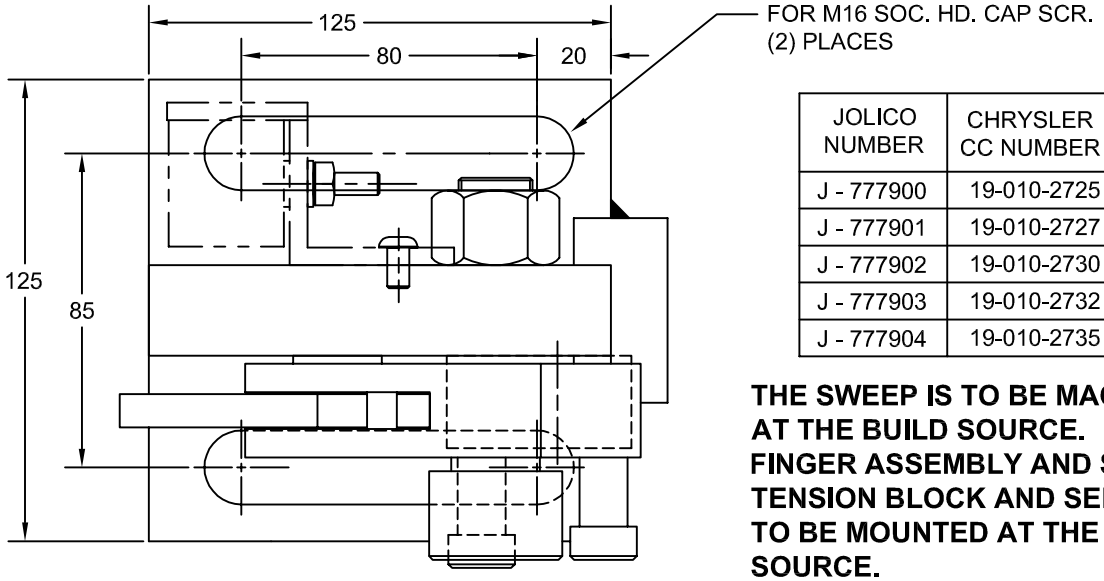

JOLICO NUMBER	CHRYSLER CC NUMBER	"H"
J - 777900	19-010-2725	250
J - 777901	19-010-2727	275
J - 777902	19-010-2730	300
J - 777903	19-010-2732	325
J - 777904	19-010-2735	350

THE SWEEP IS TO BE MACHINED AT THE BUILD SOURCE. FINGER ASSEMBLY AND SPRING TENSION BLOCK AND SENSOR IS TO BE MOUNTED AT THE BUILD SOURCE.

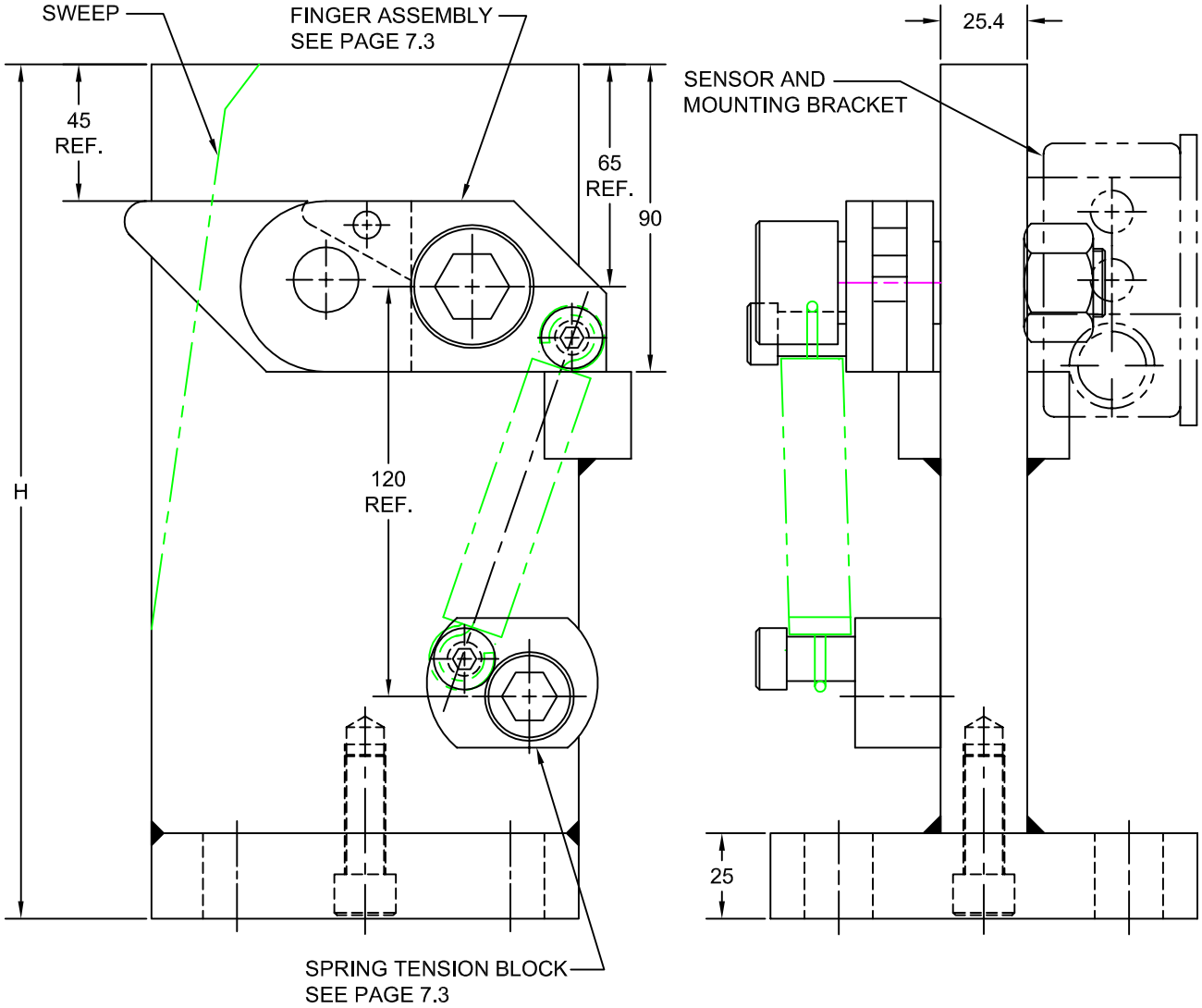

JOLICO J-B TOOL

PRINTED COPY IS UNCONTROLLED

FLAT BLANK SWEEP GAGE WITHOUT SENSOR

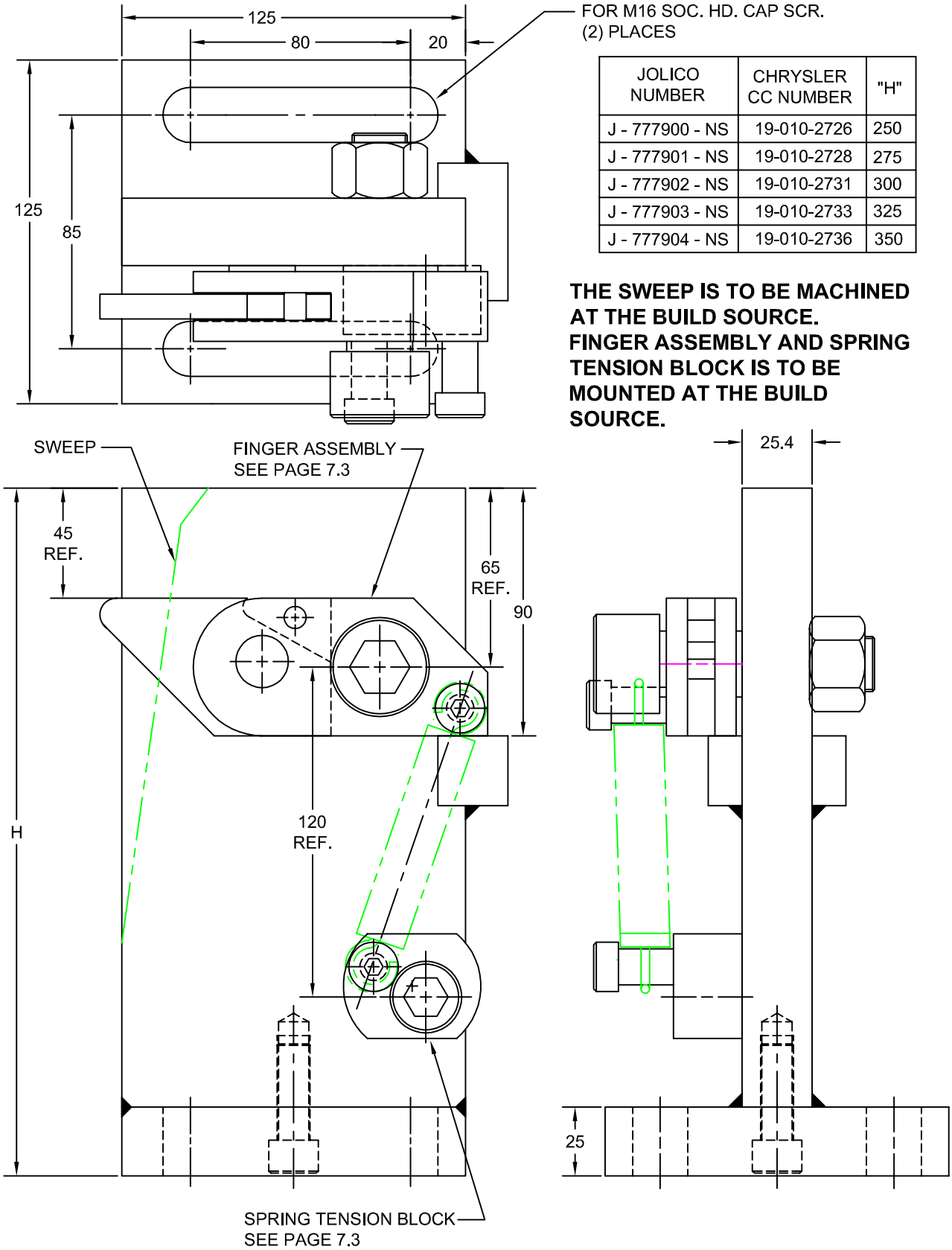

JOLICO NUMBER	CHRYSLER CC NUMBER	"H"
J - 777900 - NS	19-010-2726	250
J - 777901 - NS	19-010-2728	275
J - 777902 - NS	19-010-2731	300
J - 777903 - NS	19-010-2733	325
J - 777904 - NS	19-010-2736	350

THE SWEEP IS TO BE MACHINED AT THE BUILD SOURCE. FINGER ASSEMBLY AND SPRING TENSION BLOCK IS TO BE MOUNTED AT THE BUILD SOURCE.

JOLICO J-B TOOL

PRINTED COPY IS UNCONTROLLED

ADJUSTABLE FLAT BLANK SWEEP GAGE ASSEMBLY

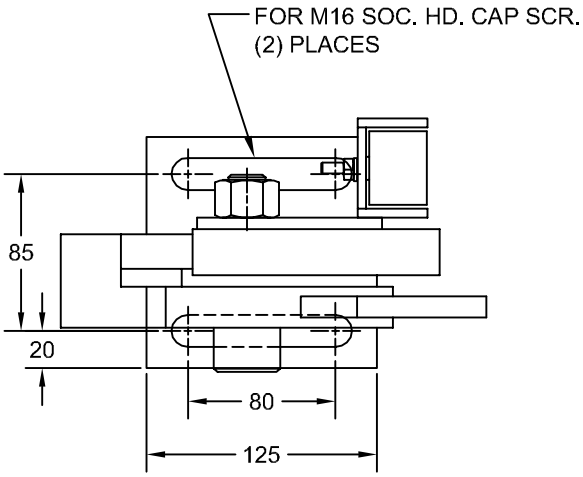

JOLICO NUMBER	COMMODITY CODE	SENSOR AND BRACKET
J-777908	19-010-0215	WITH S/B
J-777908-NS	19-010-0216	WITH OUT S/B

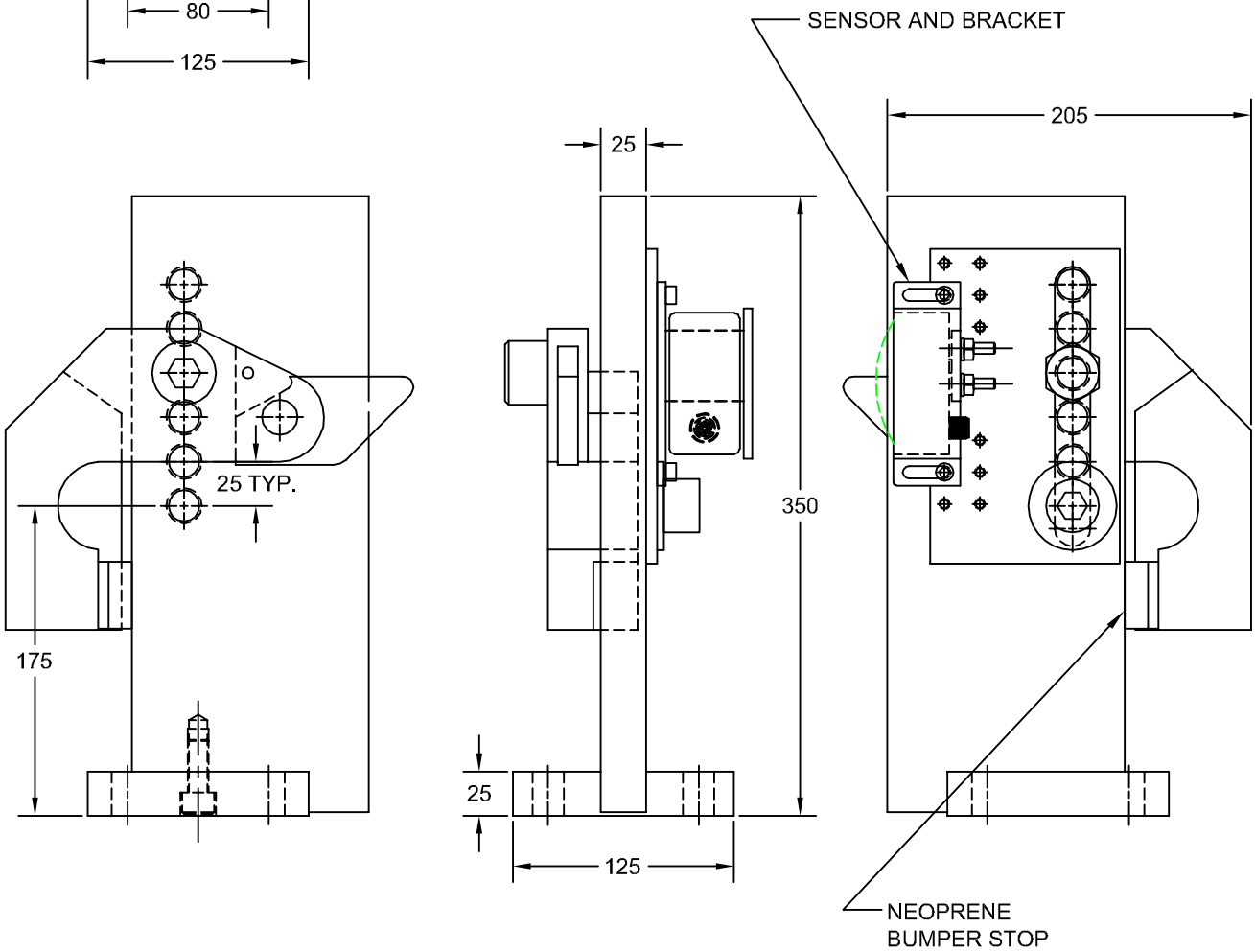

JOLICO J-B TOOL

PRINTED COPY IS UNCONTROLLED

FINGER ASSEMBLY KIT AND SENSOR BRACKET

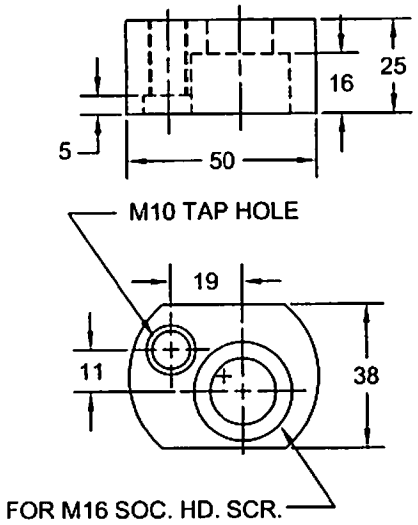

SPRING TENSION BLOCK

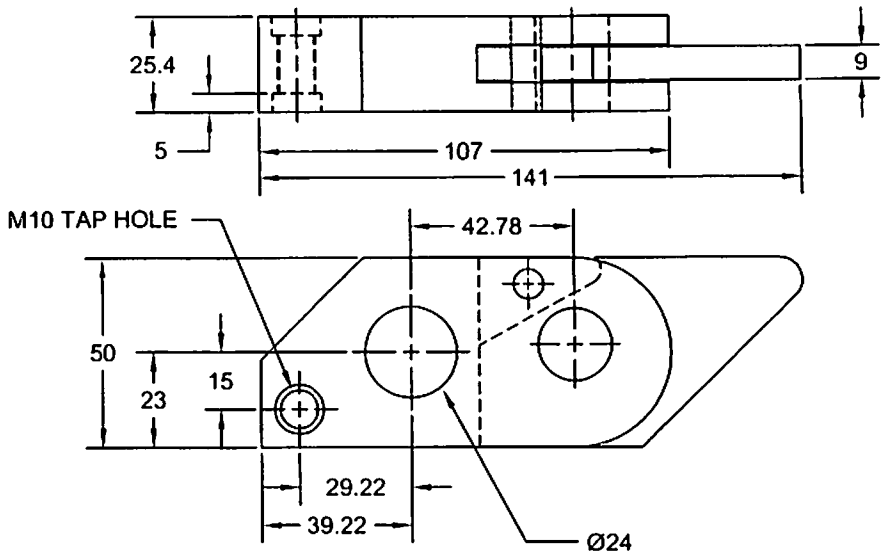

FINGER ASSEMBLY

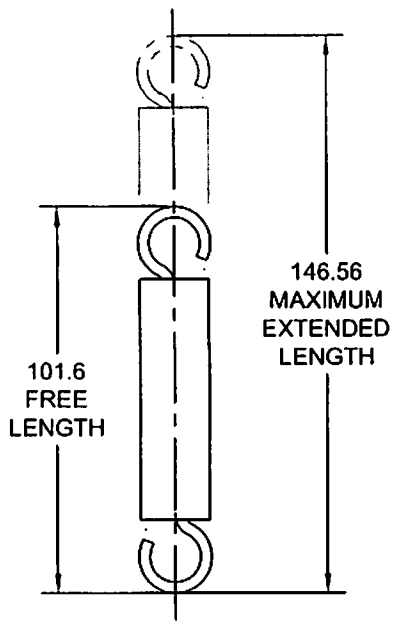

DIE SPRING

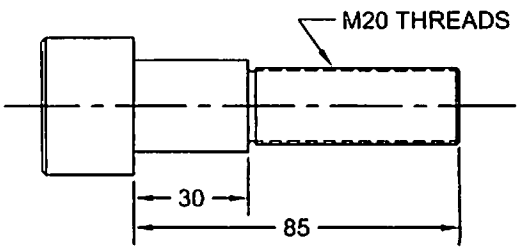

SPECIAL M20 BOLT

FINGER ASSEMBLY KIT COMES WITH
(1) FINGER ASSEMBLY
(1) SPRING TENSION BLOCK
(1) EXTENSION SPRING
(1) SPECIAL M20 BOLT AND NUT
(2) SOC. HD. SHOULDER SCR. M10 THD.

FINGER ASSEMBLY KIT

JOLICO NUMBER
J-777900-2

JOLICO J-B TOOL

PRINTED COPY IS UNCONTROLLED

DRAW DIE FLAT FACE GAGE

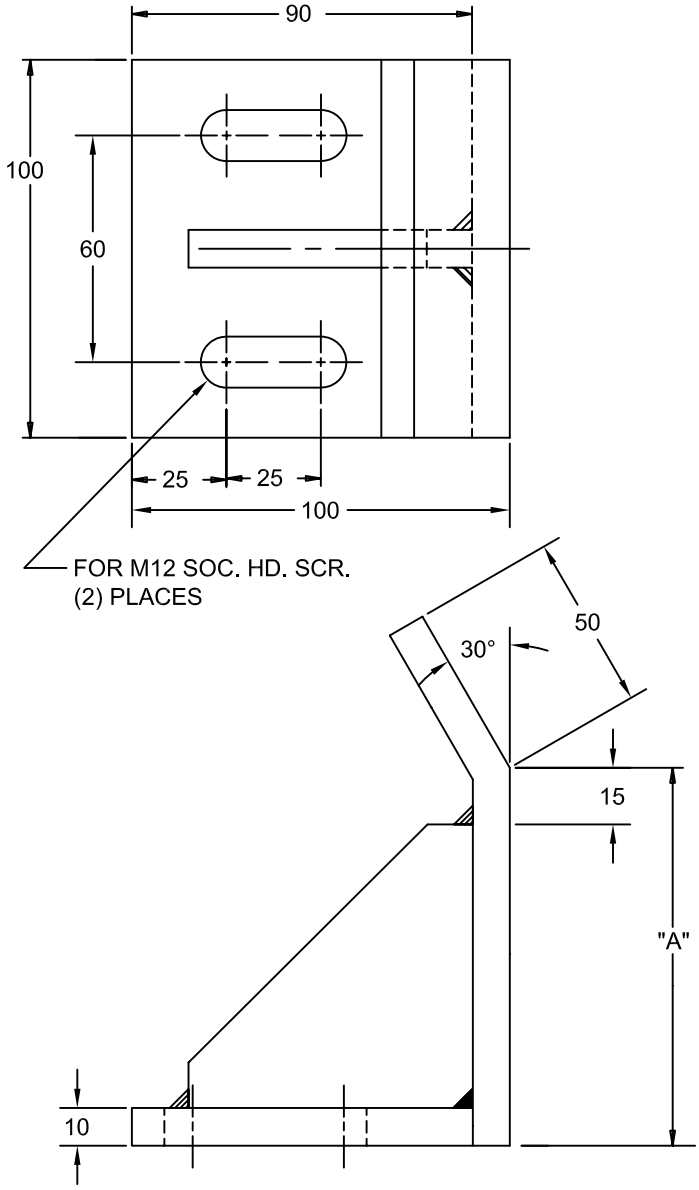

JOLICO NUMBER	CHRYSLER CC NUMBER	"A"
J - 441008 - A100	19-010-3610	100
J - 441008 - A125	19-010-3612	125
J - 441008 - A150	19-010-3615	150
J - 441008 - A175	19-010-3617	175
J - 441008 - A200	19-010-3620	200
J - 441008 - A225	19-010-3622	225
J - 441008 - A250	19-010-3625	250

JOLICO J-B TOOL

PRINTED COPY IS UNCONTROLLED

ROUND FINGER GAGE

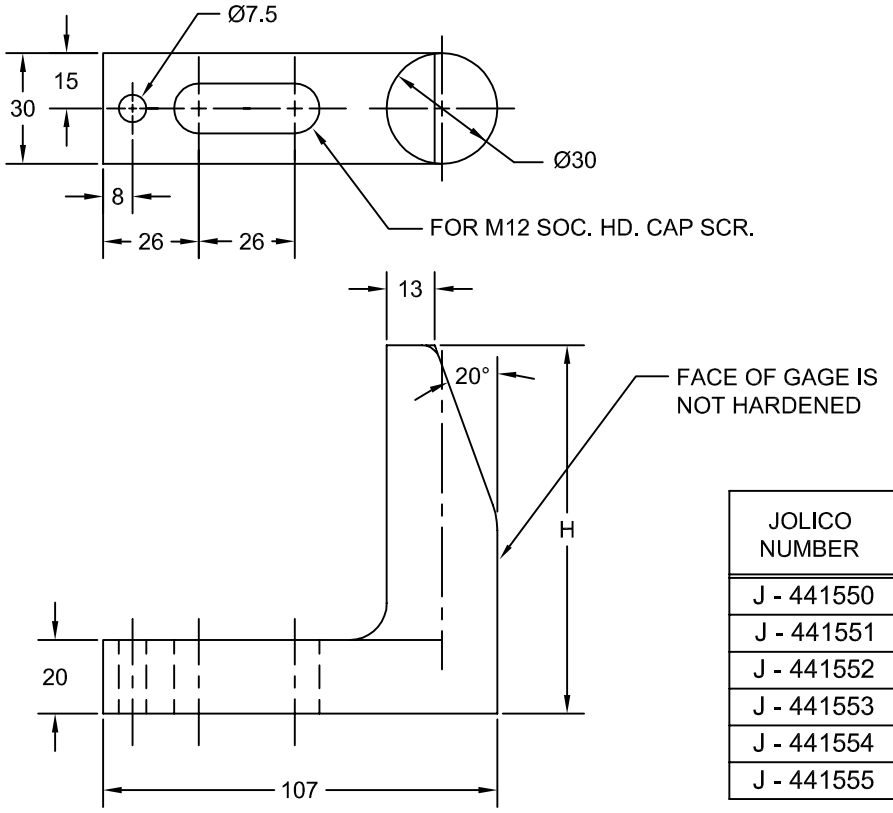

JOLICO NUMBER	CHRYSLER CC NUMBER	L
J - 441550	19-010-1706	65
J - 441551	19-010-1709	90
J - 441552	19-010-1712	120
J - 441553	19-010-1715	150
J - 441554	19-010-1718	180
J - 441555	19-010-1725	250

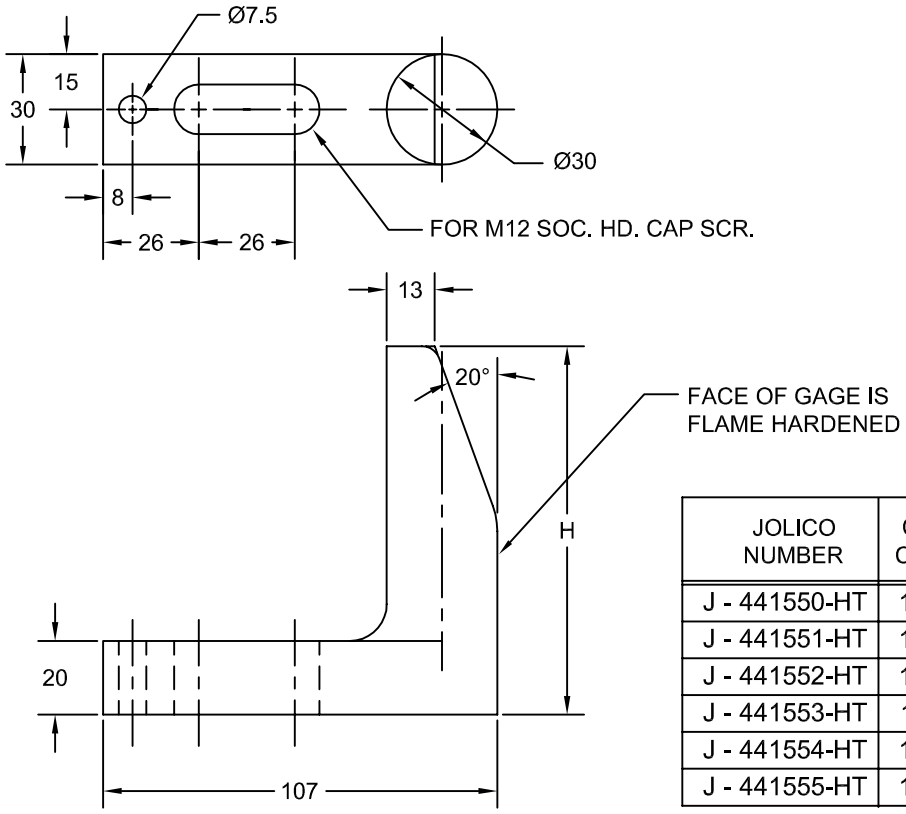

JOLICO NUMBER	CHRYSLER CC NUMBER	L
J - 441550-HT	19-010-0208	65
J - 441551-HT	19-010-0209	90
J - 441552-HT	19-010-0210	120
J - 441553-HT	19-010-0211	150
J - 441554-HT	19-010-0212	180
J - 441555-HT	19-010-0213	250

JOLICO J-B TOOL

PRINTED COPY IS UNCONTROLLED

LASER WELDED BLANK GAGE

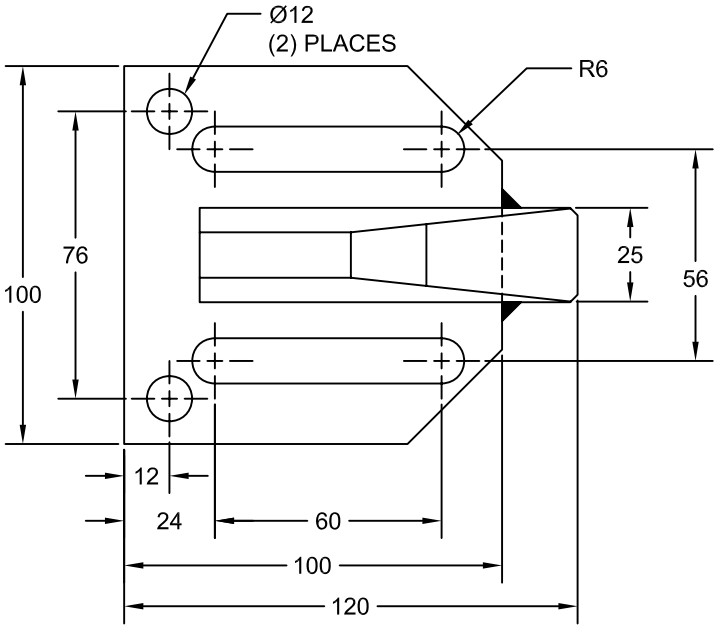

JOLICO NUMBER	CHRYSLER CC NUMBER
J-777520	19-010-2625

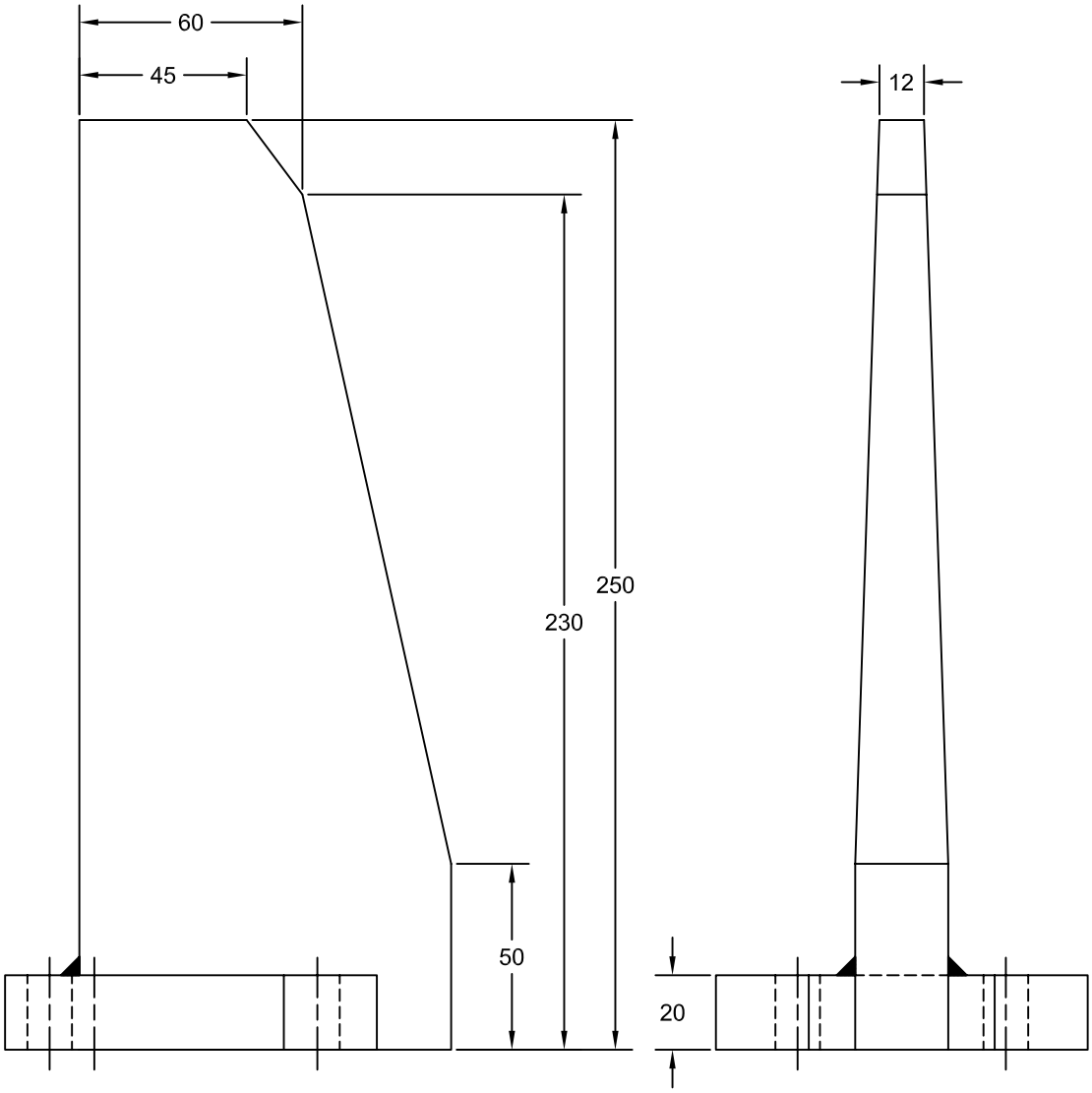

JOLICO J-B TOOL

PRINTED COPY IS UNCONTROLLED

NEST GAGE NARROW BASE

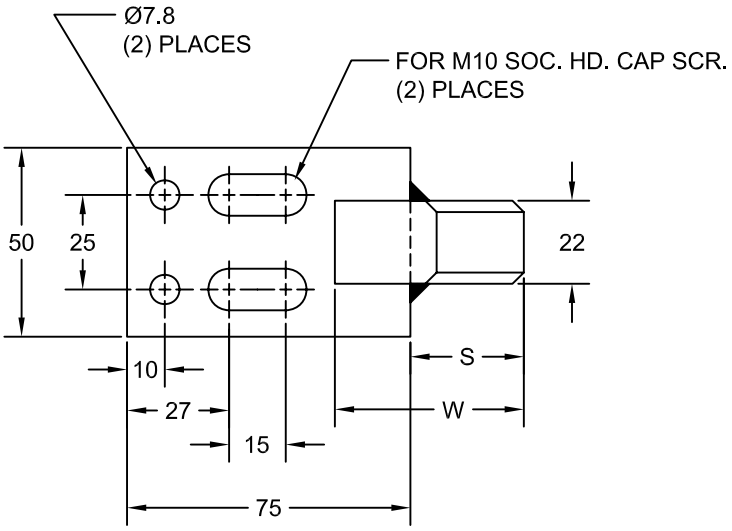

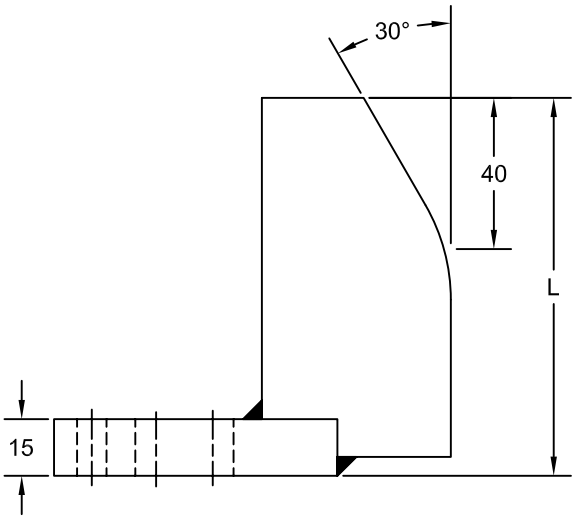

GAGE S = 15 & W = 35		
JOLICO NUMBER	CHRYSLER CC NUMBER	L DIM.
J-464100	19-010-9813	75
J-464101	19-010-9814	100
J-464102	19-010-9815	125
J-464103	19-010-9816	150
J-464104	19-010-9817	175
J-464105	19-010-9818	200

GAGE S = 30 & W = 50		
JOLICO NUMBER	CHRYSLER CC NUMBER	L DIM.
J-464106	19-010-9819	75
J-464107	19-010-9820	100
J-464108	19-010-9821	125
J-464109	19-010-9822	150
J-464110	19-010-9823	175
J-464111	19-010-9824	200

JOLICO J-B TOOL

PRINTED COPY IS UNCONTROLLED

NEST GAGE NARROW BASE

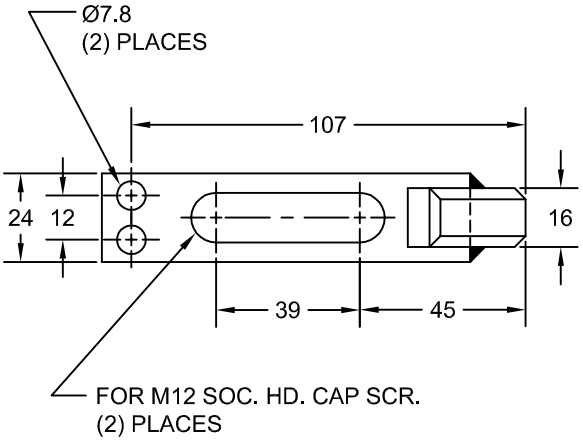

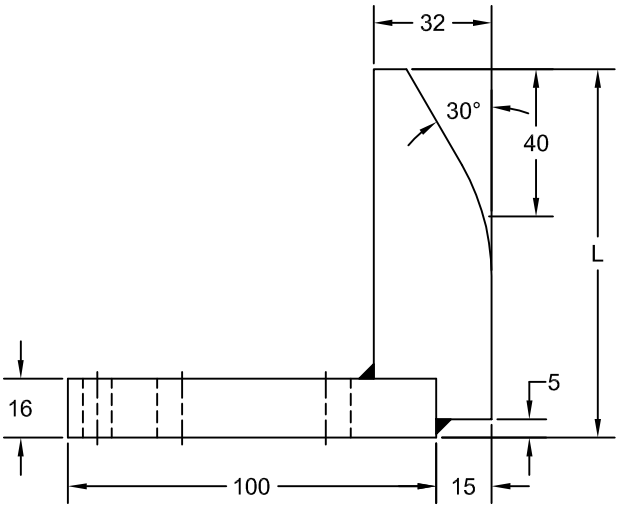

JOLICO NUMBER	CHRYSLER CC NUMBER	L DIM.
J-464030	19-010-0268	75
J-464031	19-010-0269	100
J-464032	19-010-0270	125
J-464033	19-010-0271	150
J-464034	19-010-0272	175
J-464035	19-010-0273	200

JOLICO J-B TOOL

PRINTED COPY IS UNCONTROLLED

NEST GAGE WIDE BASE

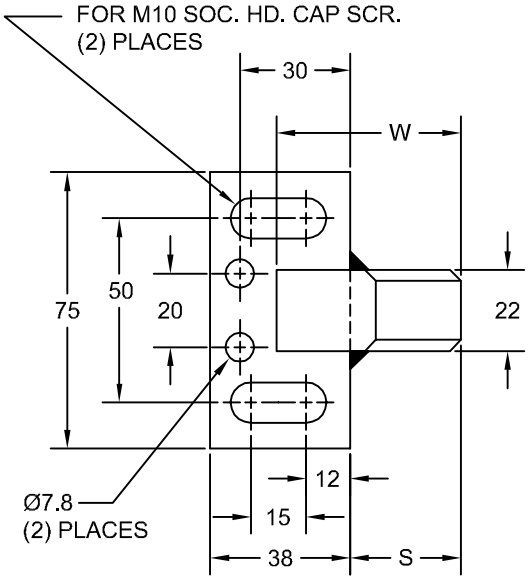

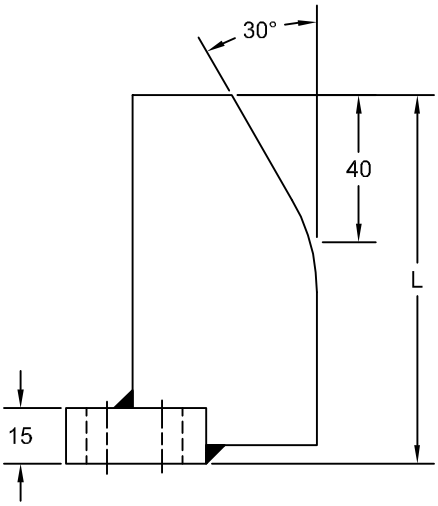

GAGE S = 15 & W = 35		
JOLICO NUMBER	CHRYSLER CC NUMBER	L DIM.
J-464000	19-010-9801	75
J-464001	19-010-9802	100
J-464002	19-010-9803	125
J-464003	19-010-9804	150
J-464004	19-010-9805	175
J-464005	19-010-9806	200

GAGE S = 30 & W = 50		
JOLICO NUMBER	CHRYSLER CC NUMBER	L DIM.
J-464006	19-010-9807	75
J-464007	19-010-9808	100
J-464008	19-010-9809	125
J-464009	19-010-9810	150
J-464010	19-010-9811	175
J-464011	19-010-9812	200

JOLICO J-B TOOL

PRINTED COPY IS UNCONTROLLED

NEST GAGE WIDE BASE

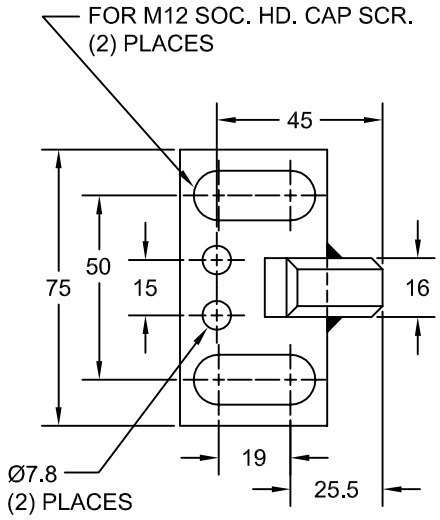

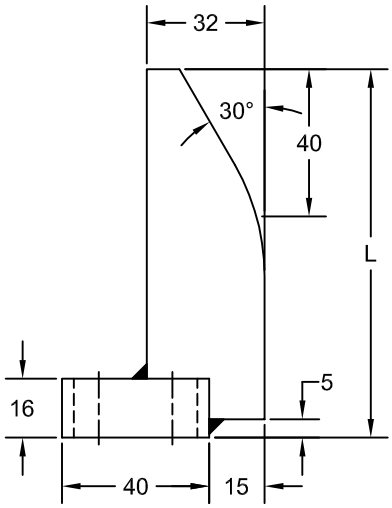

JOLICO NUMBER	CHRYSLER CC NUMBER	L DIM.
J-464020	19-010-0262	75
J-464021	19-010-0263	100
J-464022	19-010-0264	125
J-464023	19-010-0265	150
J-464024	19-010-0266	175
J-464025	19-010-0267	200

JOLICO J-B TOOL

PRINTED COPY IS UNCONTROLLED

NEST GAGE SIDE MOUNT R.H. BASE

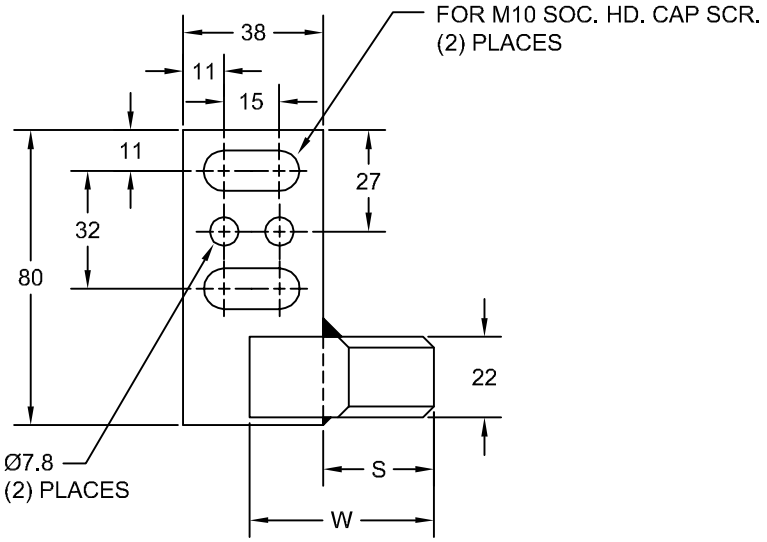

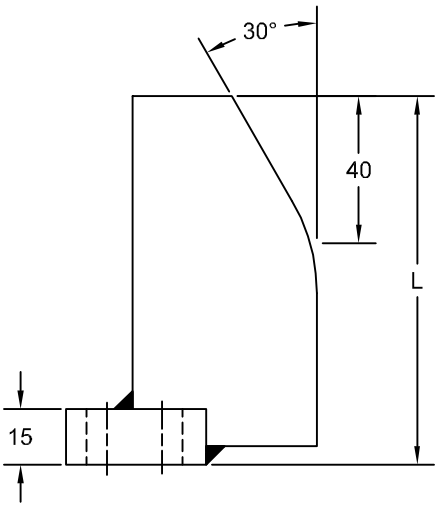

GAGE S = 15 & W = 35		
JOLICO NUMBER	CHRYSLER CC NUMBER	L DIM.
J-464200	19-010-9825	75
J-464201	19-010-9826	100
J-464202	19-010-9827	125
J-464203	19-010-9828	150
J-464204	19-010-9829	175
J-464205	19-010-9830	200

GAGE S = 30 & W = 50		
JOLICO NUMBER	CHRYSLER CC NUMBER	L DIM.
J-464206	19-010-9831	75
J-464207	19-010-9832	100
J-464208	19-010-9833	125
J-464209	19-010-9834	150
J-464210	19-010-9835	175
J-464211	19-010-9836	200

JOLICO J-B TOOL

PRINTED COPY IS UNCONTROLLED

NEST GAGE SIDE MOUNT R.H. BASE

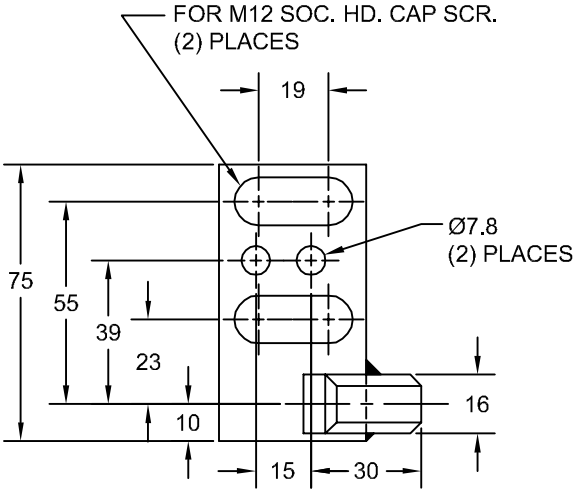

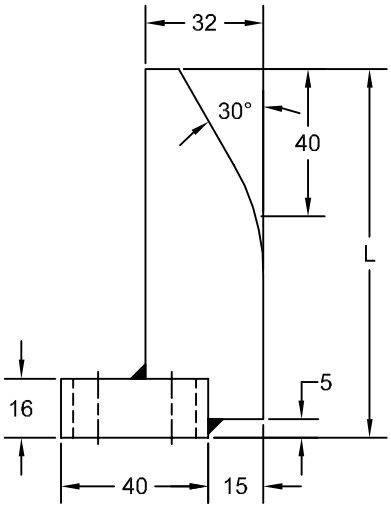

JOLICO NUMBER	CHRYSLER CC NUMBER	L DIM.
J-464040	19-010-0274	75
J-464041	19-010-0275	100
J-464042	19-010-0276	125
J-464043	19-010-0277	150
J-464044	19-010-0278	175
J-464045	19-010-0279	200

JOLICO J-B TOOL

PRINTED COPY IS UNCONTROLLED

NEST GAGE SIDE MOUNT L.H. BASE

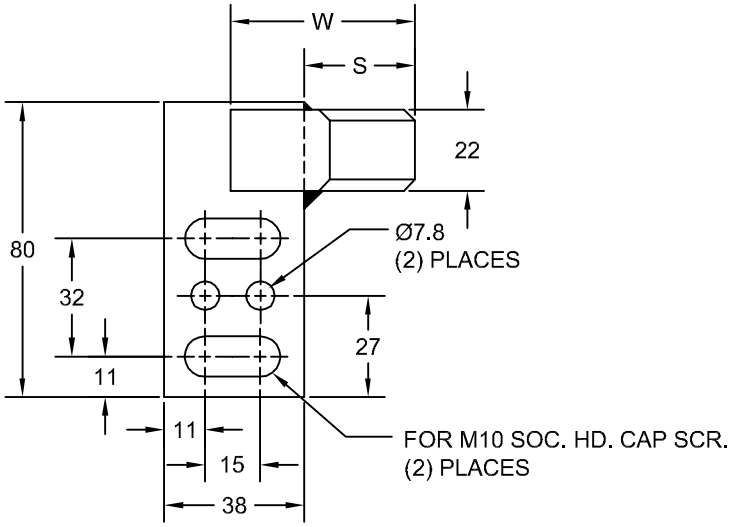

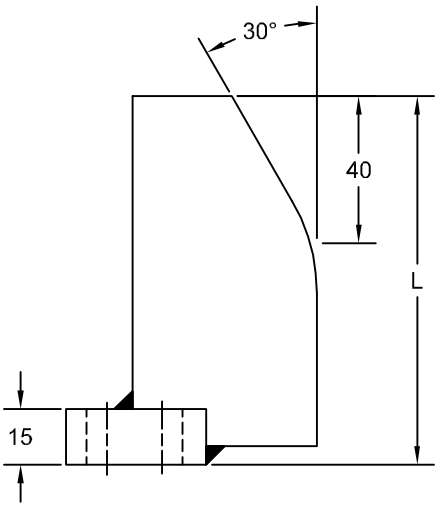

GAGE S = 15 & W = 35		
JOLICO NUMBER	CHRYSLER CC NUMBER	L DIM.
J-464300	19-010-9837	75
J-464301	19-010-9838	100
J-464302	19-010-9839	125
J-464303	19-010-9840	150
J-464304	19-010-9841	175
J-464305	19-010-9842	200

GAGE S = 30 & W = 50		
JOLICO NUMBER	CHRYSLER CC NUMBER	L DIM.
J-464306	19-010-9843	75
J-464307	19-010-9844	100
J-464308	19-010-9845	125
J-464309	19-010-9846	150
J-464310	19-010-9847	175
J-464311	19-010-9848	200

JOLICO J-B TOOL

PRINTED COPY IS UNCONTROLLED

NEST GAGE SIDE MOUNT L.H. BASE

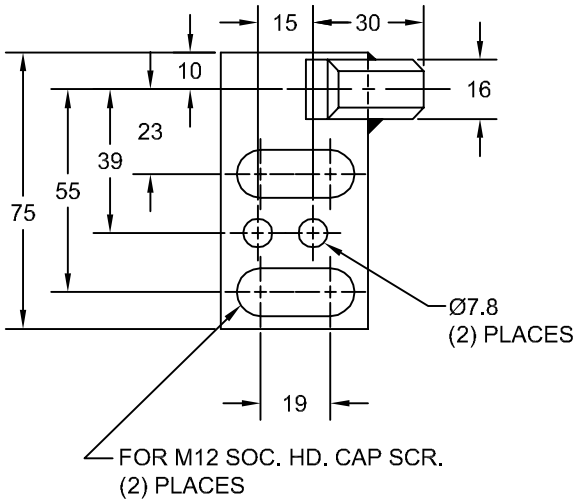

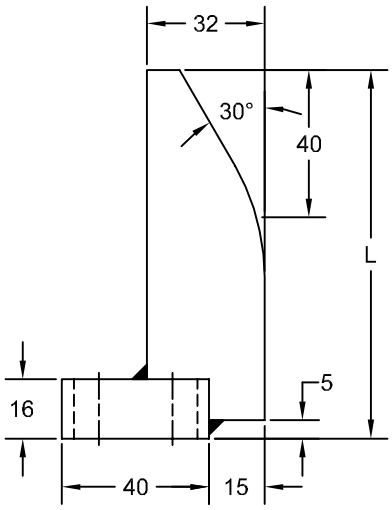

JOLICO NUMBER	CHRYSLER CC NUMBER	L DIM.
J-464050	19-010-0280	75
J-464051	19-010-0281	100
J-464052	19-010-0282	125
J-464053	19-010-0283	150
J-464054	19-010-0284	175
J-464055	19-010-0285	200

JOLICO J-B TOOL

PRINTED COPY IS UNCONTROLLED

ROUND FINGER GAGE WITH SWING PLATE AND SENSOR

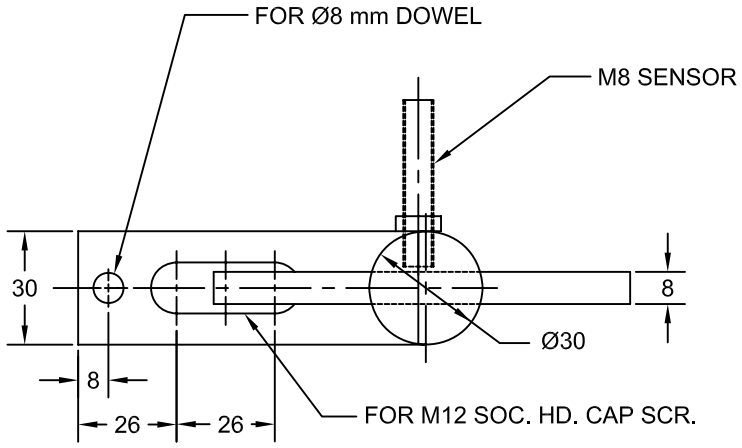

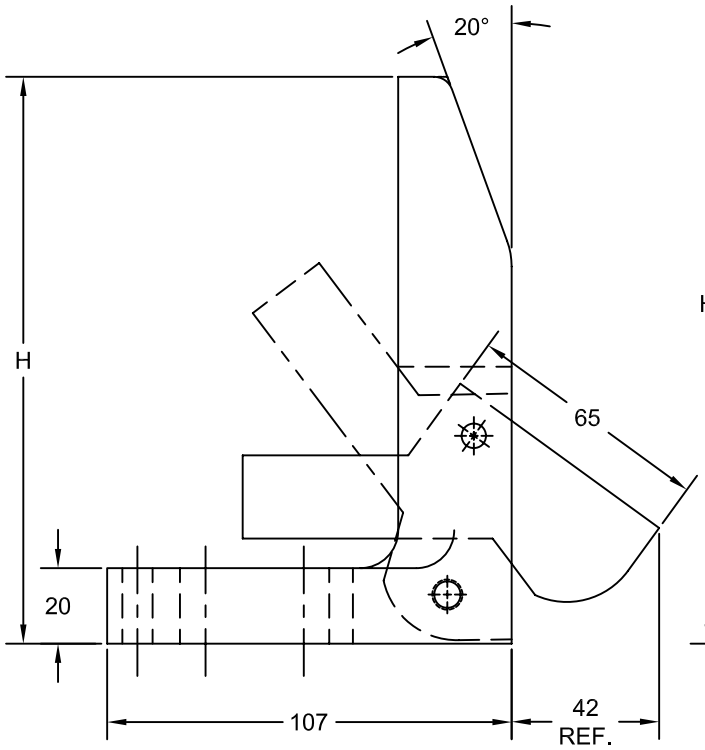

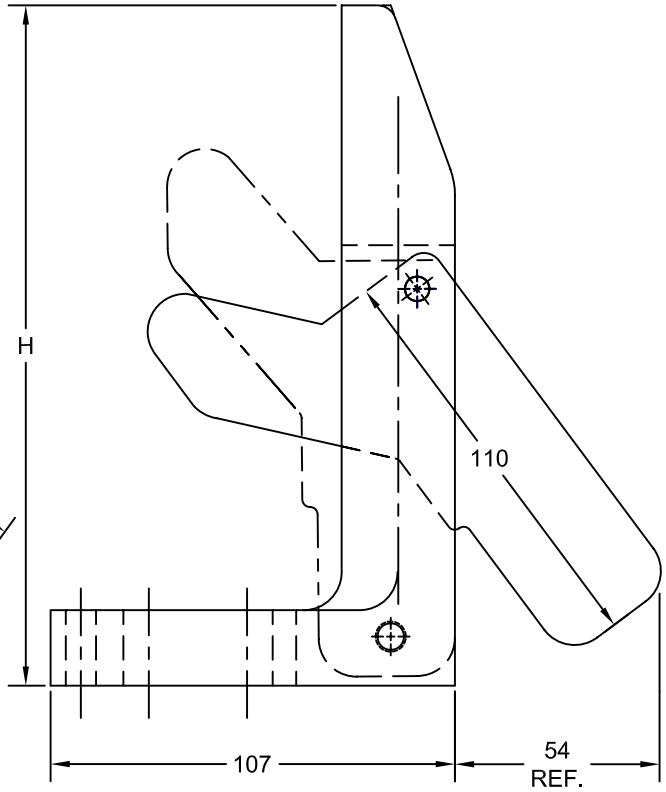

FINGER GAGE W/SENSOR & 65 mm BLADE

JOLICO NUMBER	CHRYSLER CC NUMBER	H
J - 441571	19-010-1830	150
J - 441572	19-010-1831	180
J - 441573	19-010-1832	250

FINGER GAGE W/SENSOR & 110 mm BLADE

JOLICO NUMBER	CHRYSLER CC NUMBER	H
J - 441570	19-010-1841	180
J - 441575	19-010-1842	250

JOLICO J-B TOOL

PRINTED COPY IS UNCONTROLLED

TOOLING HOLE SETUP BLOCK

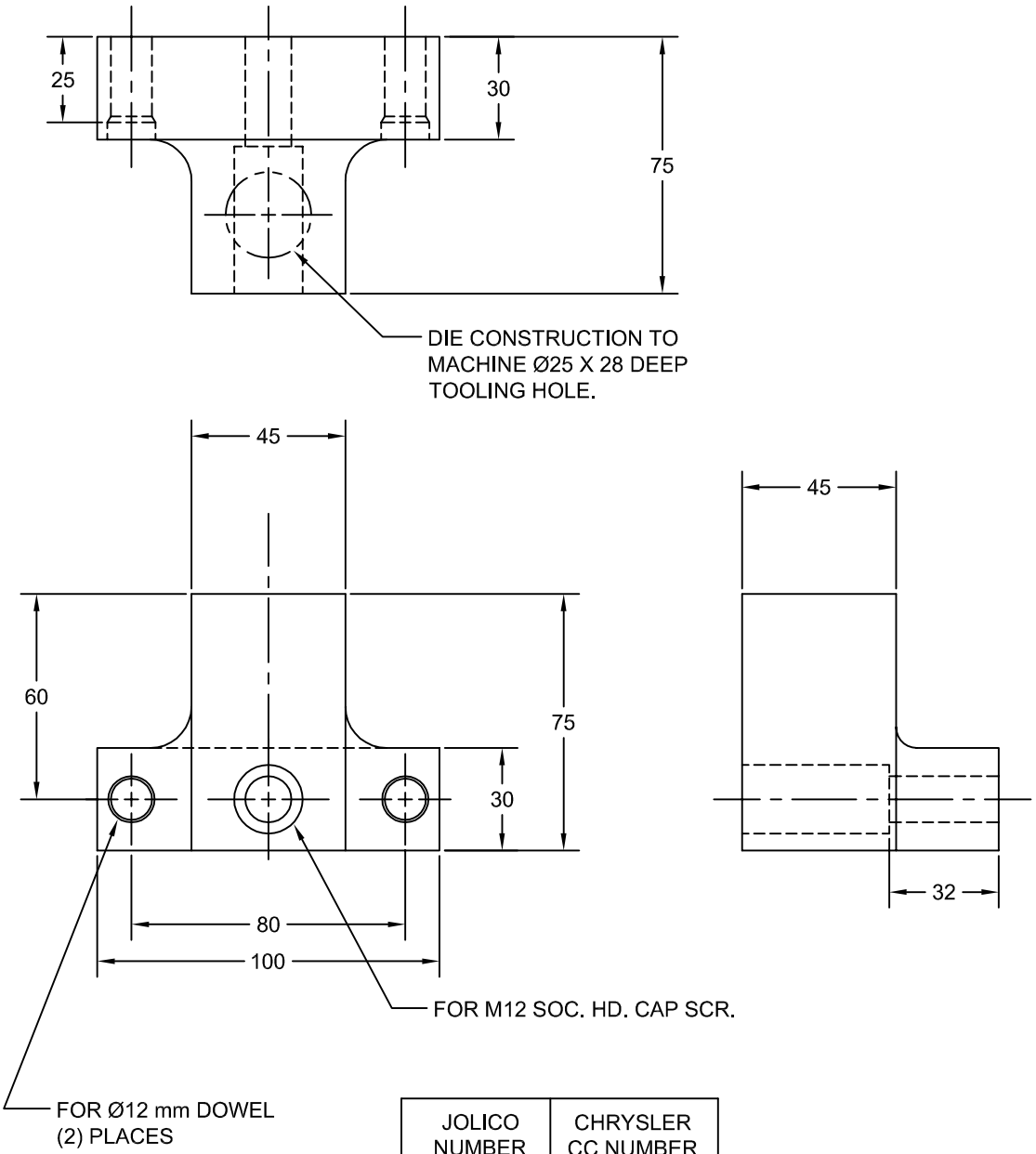

JOLICO NUMBER	CHRYSLER CC NUMBER
J - 999875	42-374-0036

JOLICO J-B TOOL

PRINTED COPY IS UNCONTROLLED

SWEEP GAGE ASSEMBLY

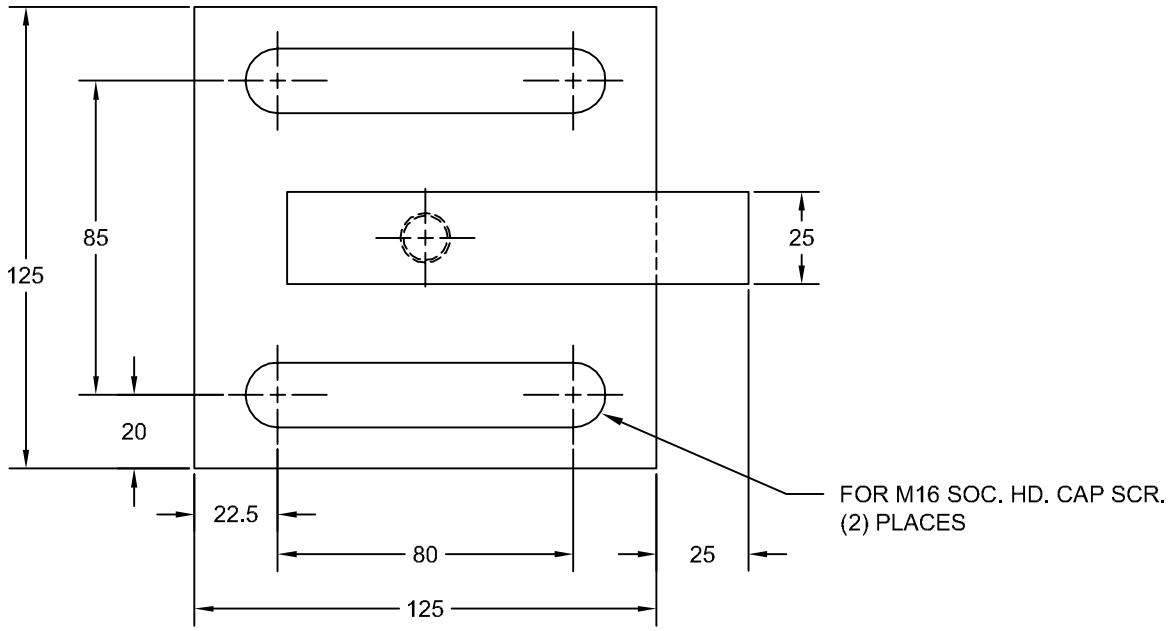

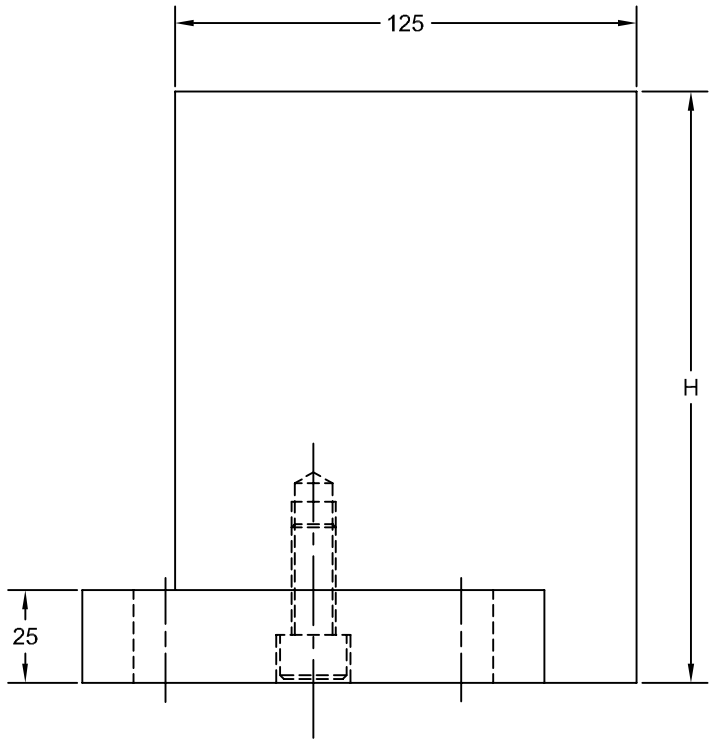

JOLICO NUMBER	COMMODITY CODE	H
J-777918	19-010-0222	350
J-777919	19-010-0223	160

JOLICO J-B TOOL

PRINTED COPY IS UNCONTROLLED

GAGE PLATE

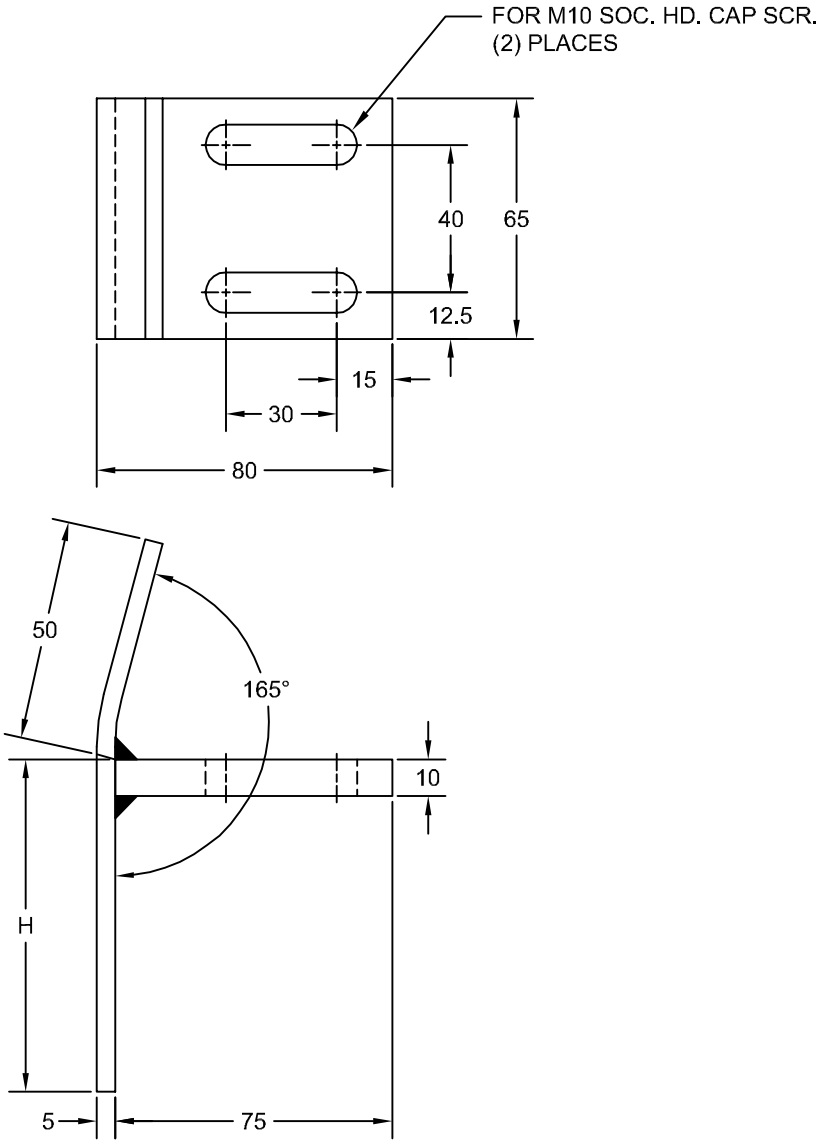

JOLICO NUMBER	COMMODITY CODE	H
J-441140	19-010-3407	75
J-441141	19-010-3410	100
J-441142	19-010-3415	150
J-441143	19-010-3420	200
J-441144	19-010-3425	250
J-441145	19-010-3430	300

JOLICO J-B TOOL

PRINTED COPY IS UNCONTROLLED

PRECEDING PIN CANNISTER ASSEMBLY

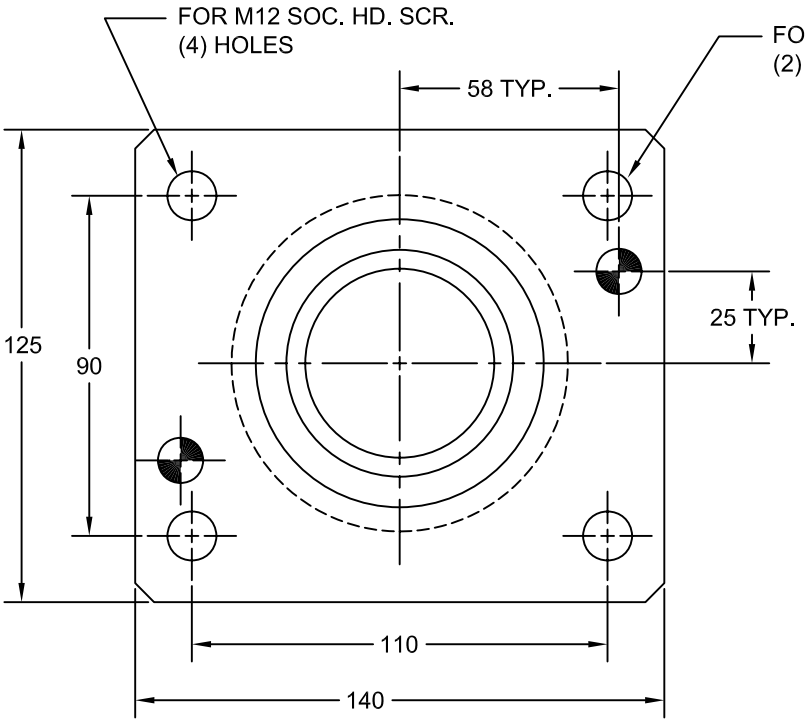

JOLICO NUMBER	CHRYSLER CC NUMBER	L DIM.
J-999006	19-010-3506	160
J-999008	19-010-3508	210
J-999010	19-010-3510	260
J-999012	19-010-3512	310
J-999014	19-010-3514	360
J-999016	19-010-3516	410
J-999018	19-010-3518	460
J-999020	19-010-3520	510
J-999022	19-010-3522	560
J-999024	19-010-3524	610
J-999026	19-010-3526	660

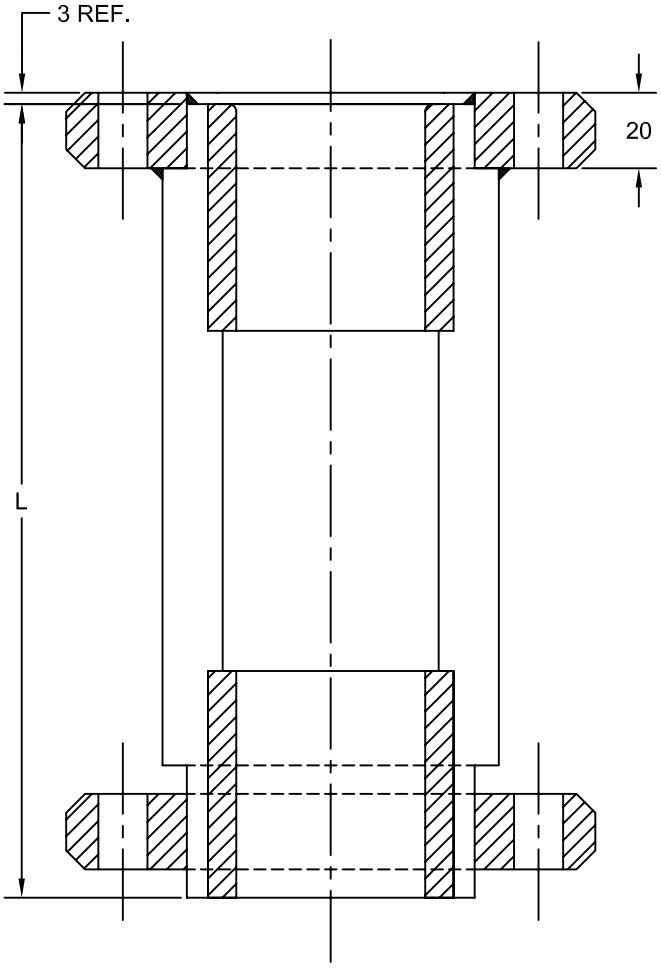

PRECEDING PIN CANNISTER
ASSEMBLY SUPPLIED WITH
(2) CANNISTER SUPPORT PLATES
(1) CANNISTER
(2) BRONZE BUSHING
(4) M12 X 40 LG. SCREWS

JOLICO J-B TOOL

PRINTED COPY IS UNCONTROLLED

CANNISTER SUPPORT PLATE

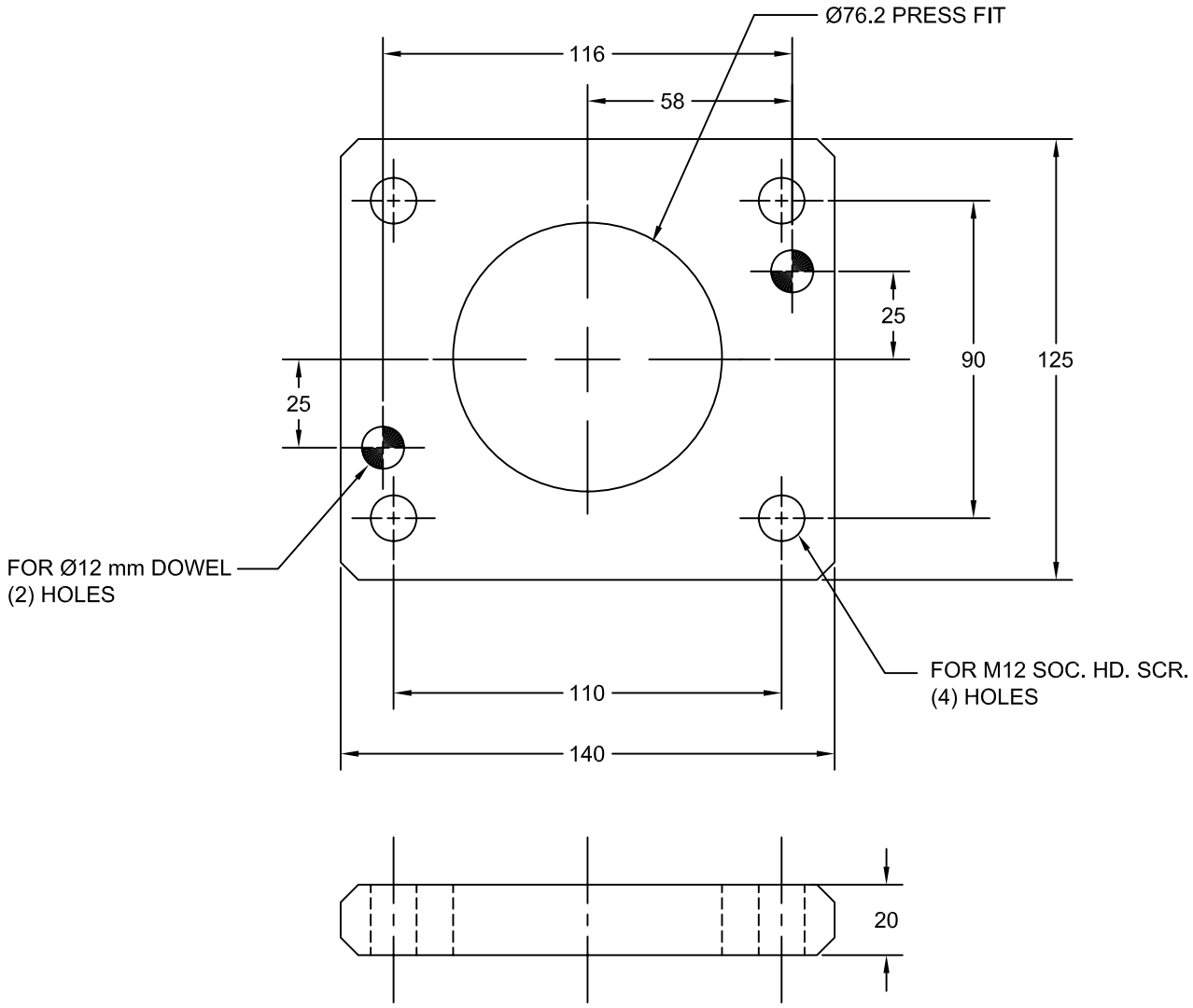

JOLICO NUMBER	CHRYSLER CC NUMBER
J-999894	19-010-4060

JOLICO J-B TOOL

PRINTED COPY IS UNCONTROLLED

UPPER FLANGE PLATE

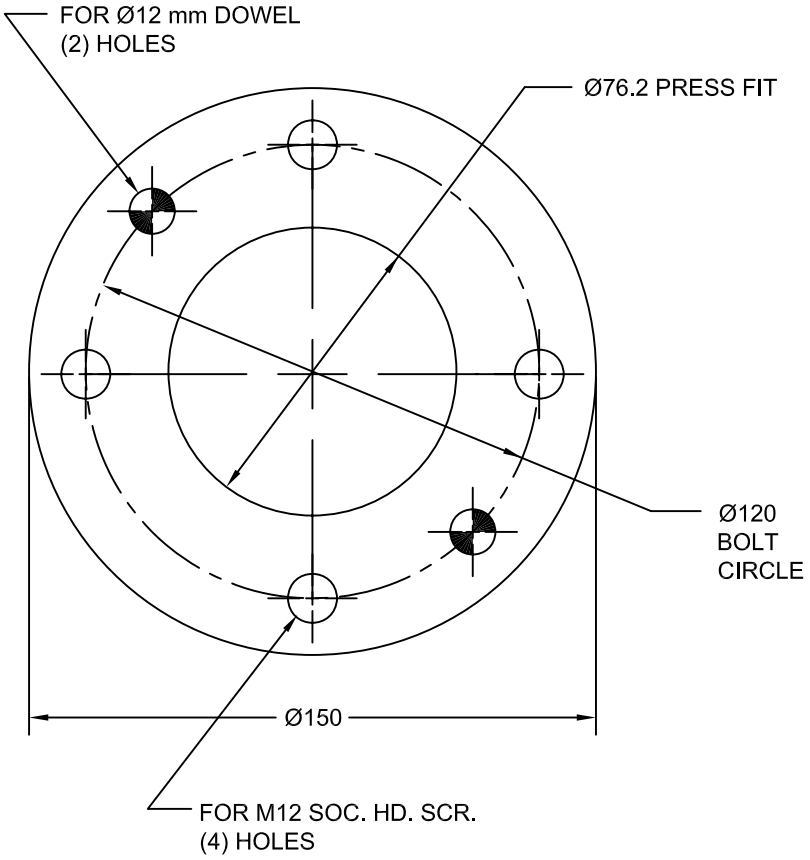

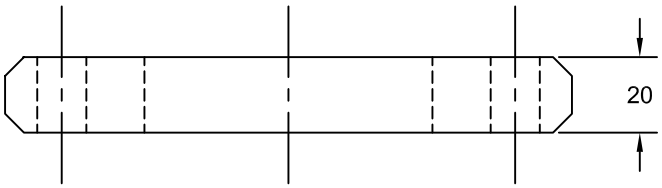

JOLICO NUMBER	CHRYSLER CC NUMBER
J-999994	19-010-4050

JOLICO J-B TOOL

PRINTED COPY IS UNCONTROLLED

PRECEDING PIN CANNISTER

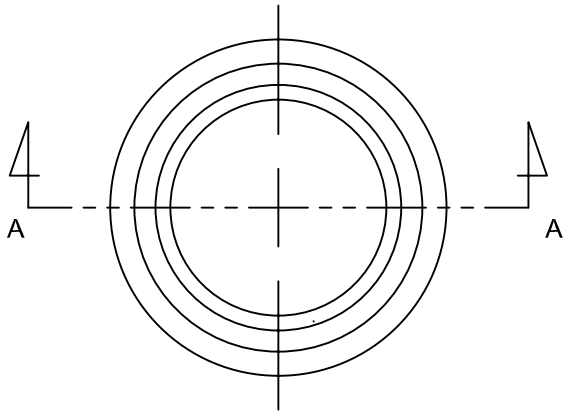

JOLICO NUMBER	CHRYSLER CC NUMBER	L DIM.
J-999899	19-010-4006	160
J-999900	19-010-4008	210
J-999901	19-010-4010	260
J-999902	19-010-4012	310
J-999903	19-010-4014	360
J-999904	19-010-4016	410
J-999905	19-010-4018	460
J-999906	19-010-4020	510
J-999907	19-010-4022	560
J-999908	19-010-4024	610
J-999909	19-010-4026	660

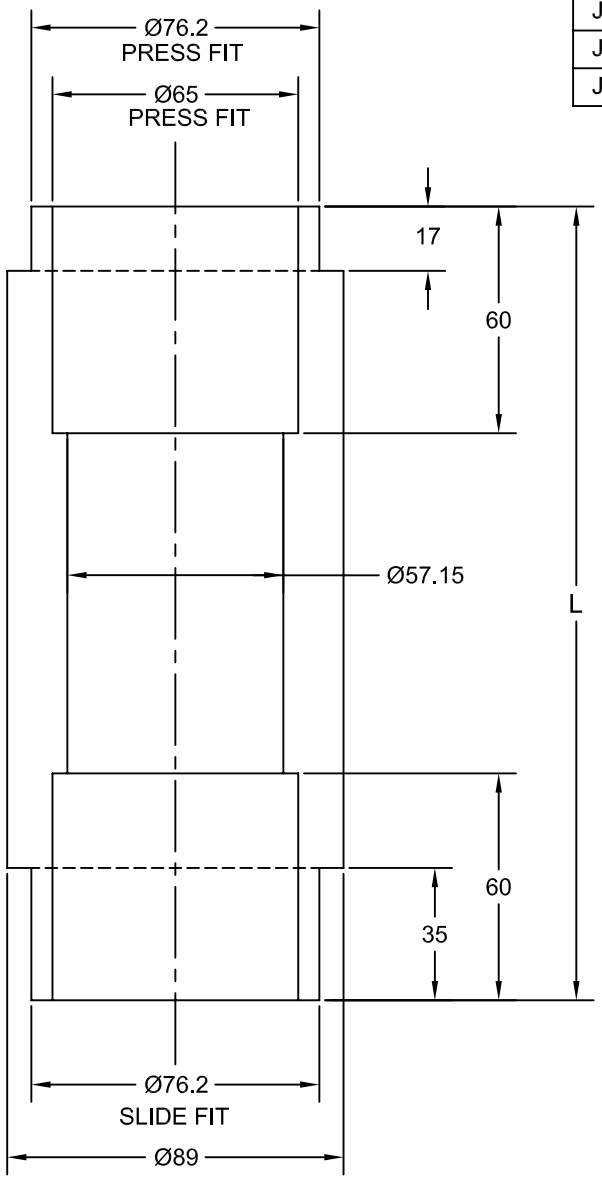

JOLICO J-B TOOL

PRINTED COPY IS UNCONTROLLED

PRECEDING PIN

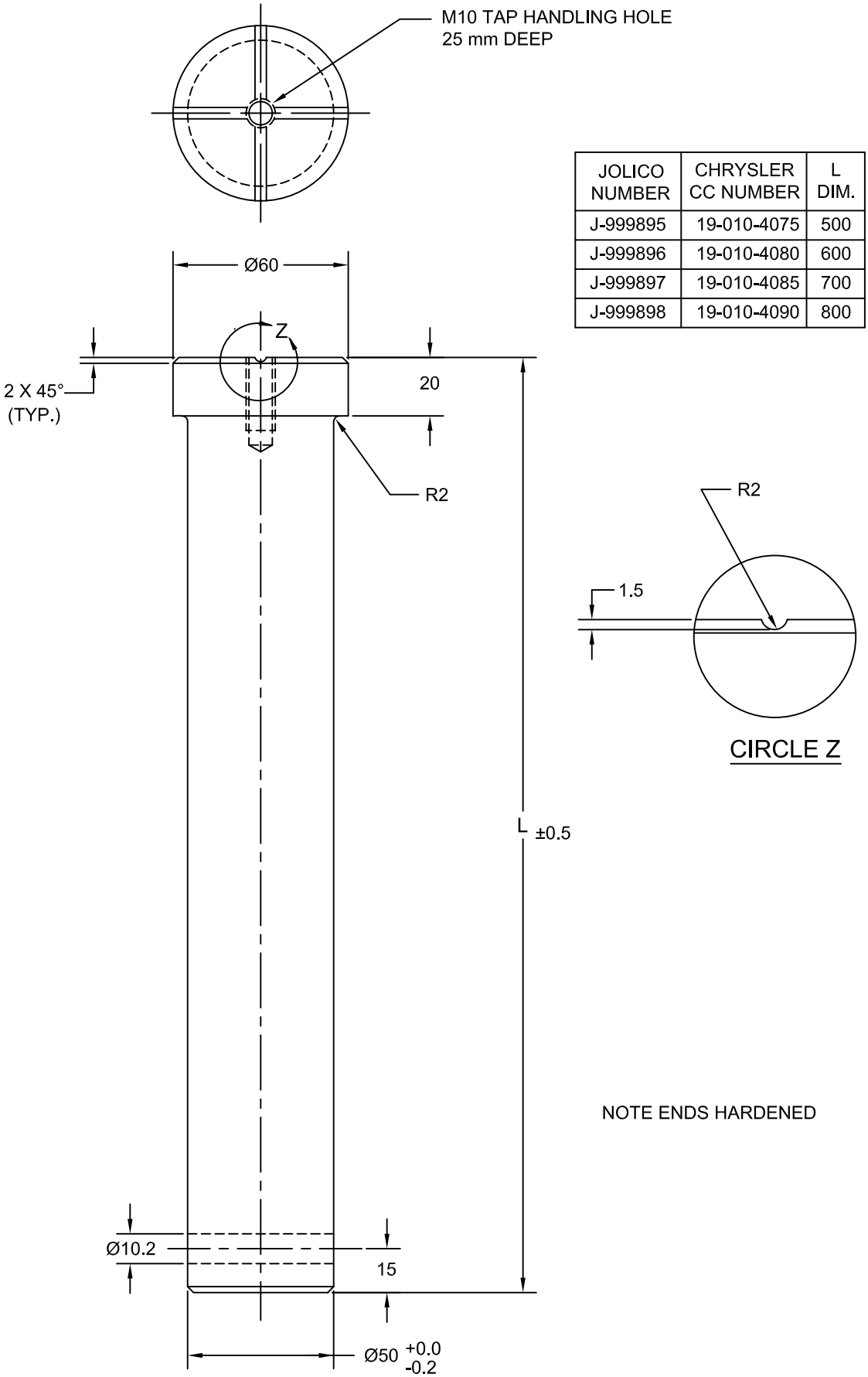

JOLICO NUMBER	CHRYSLER CC NUMBER	L DIM.
J-999895	19-010-4075	500
J-999896	19-010-4080	600
J-999897	19-010-4085	700
J-999898	19-010-4090	800

NOTE ENDS HARDENED

JOLICO J-B TOOL

PRINTED COPY IS UNCONTROLLED

ROUND NEOPRENE BUMPERS

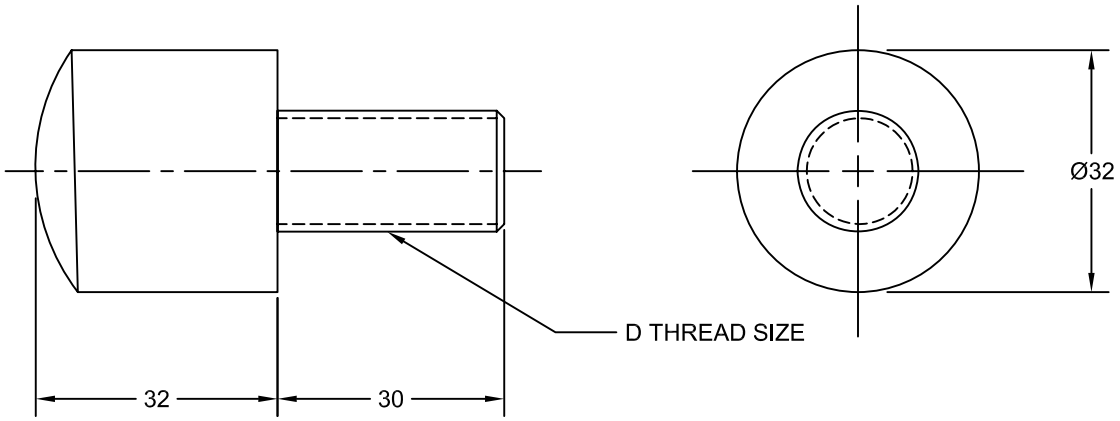

BUMPER WITH MALE THREAD

JOLICO NUMBER	CHRYSLER CC NUMBER	D THREAD SIZE
J-772003	42-496-2005	M16 X 2.00
J-772004	42-496-2010	M16 X 1.50

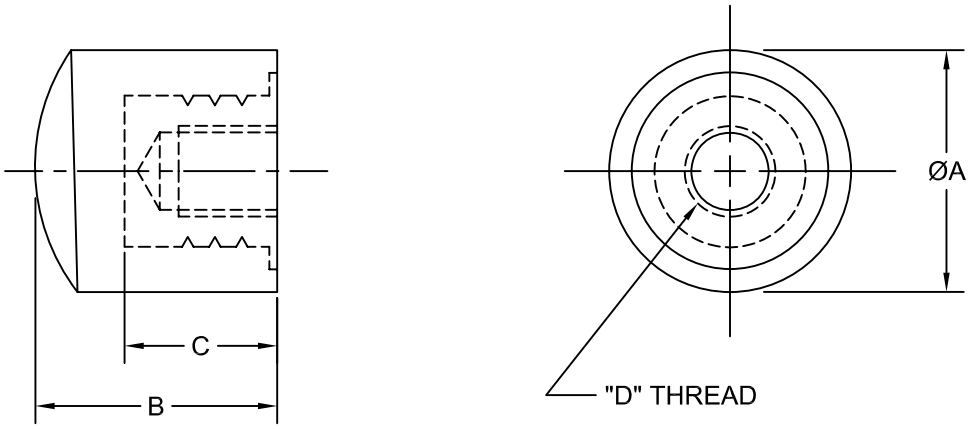

BUMPER WITH FEMALE THREAD

JOLICO NUMBER	CHRYSLER CC NUMBER	ØA	B	C	D THREAD SIZE
J-772403	42-496-2115	32	32	19	M12 X 1.75 X 13 mm DEEP
J-772404	42-496-2120	45	41	22	M16 X 2.00 X 16 mm DEEP
J-772401	42-496-2105	32	32	19	M12 X 1.25 X 15 mm DEEP
J-772402	42-496-2110	45	41	22	M16 X 1.50 X 20 mm DEEP

BLACK NEOPRENE 40-45 DUROMETER

JOLICO J-B TOOL

PRINTED COPY IS UNCONTROLLED

LIFTER BRUSH

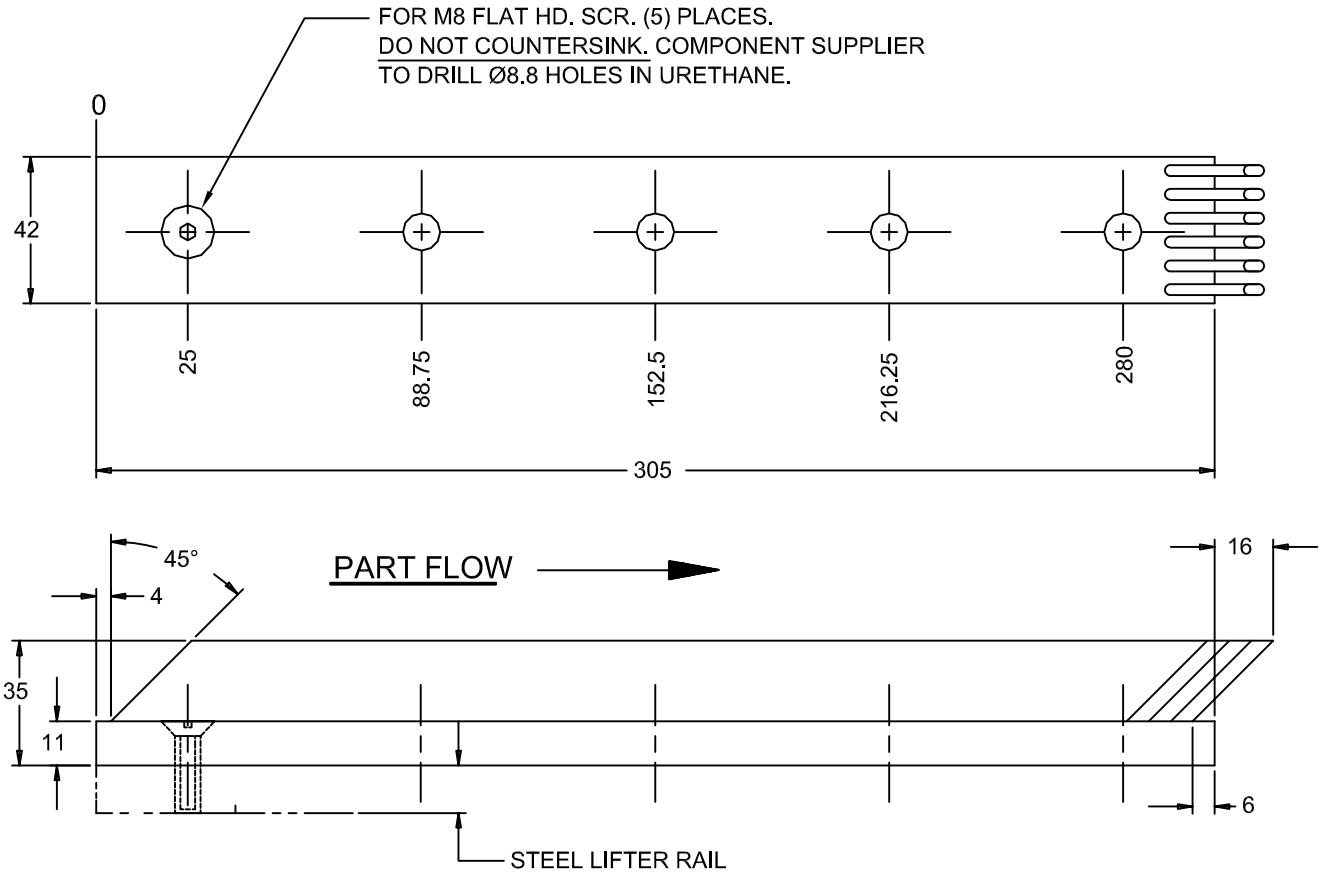

JOLICO NUMBER	CHRYSLER CC NUMBER
J-772302	19-227-0068
J-772306	19-227-0069

JOLICO J-B TOOL

PRINTED COPY IS UNCONTROLLED

AIR PIN TIMING BLOCK

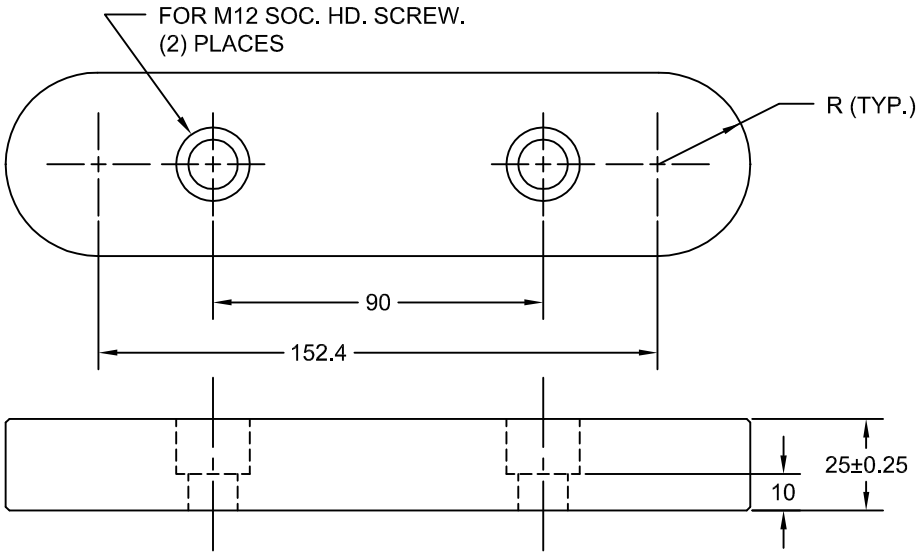

AIR PIN TIMING BLOCK

JOLICO NUMBER	CHRYSLER CC NUMBER	R TYP.
J-996238	19-010-0076	25
J-996236	19-010-0111	30

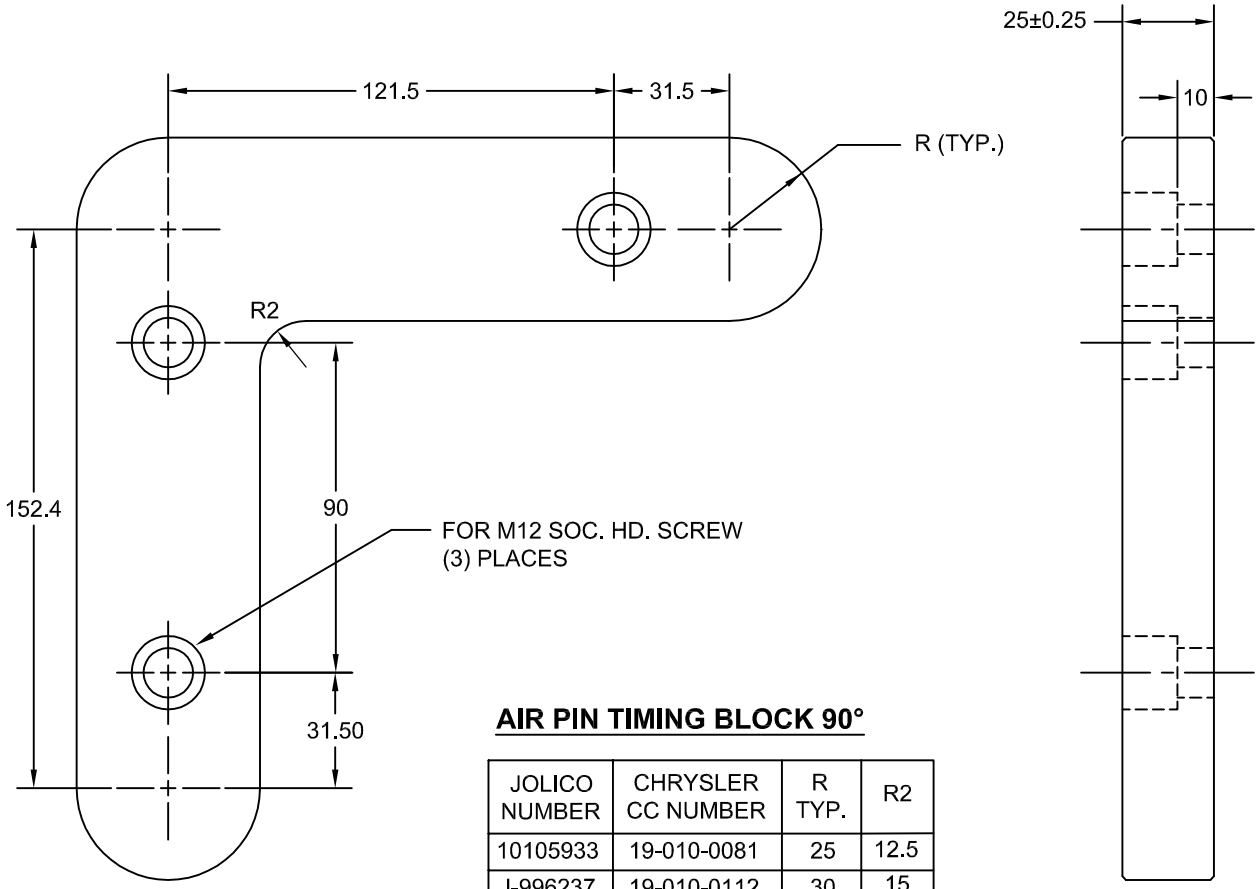

AIR PIN TIMING BLOCK 90°

JOLICO NUMBER	CHRYSLER CC NUMBER	R TYP.	R2
10105933	19-010-0081	25	12.5
J-996237	19-010-0112	30	15

JOLICO J-B TOOL

PRINTED COPY IS UNCONTROLLED

STRIKER PLATE

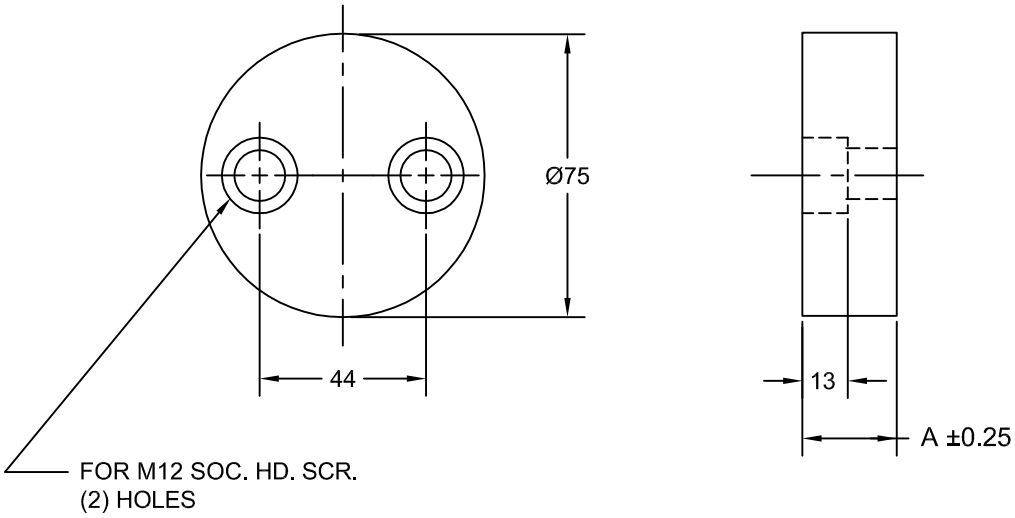

JOLICO NUMBER	CHRYSLER CC NUMBER	A DIM.
J-449300	19-010-9601	25

JOLICO J-B TOOL

PRINTED COPY IS UNCONTROLLED

RUBBER STORAGE BLOCK SWING AWAY BASE
USE FOR Ø100 AND Ø125 STORAGE BLOCK

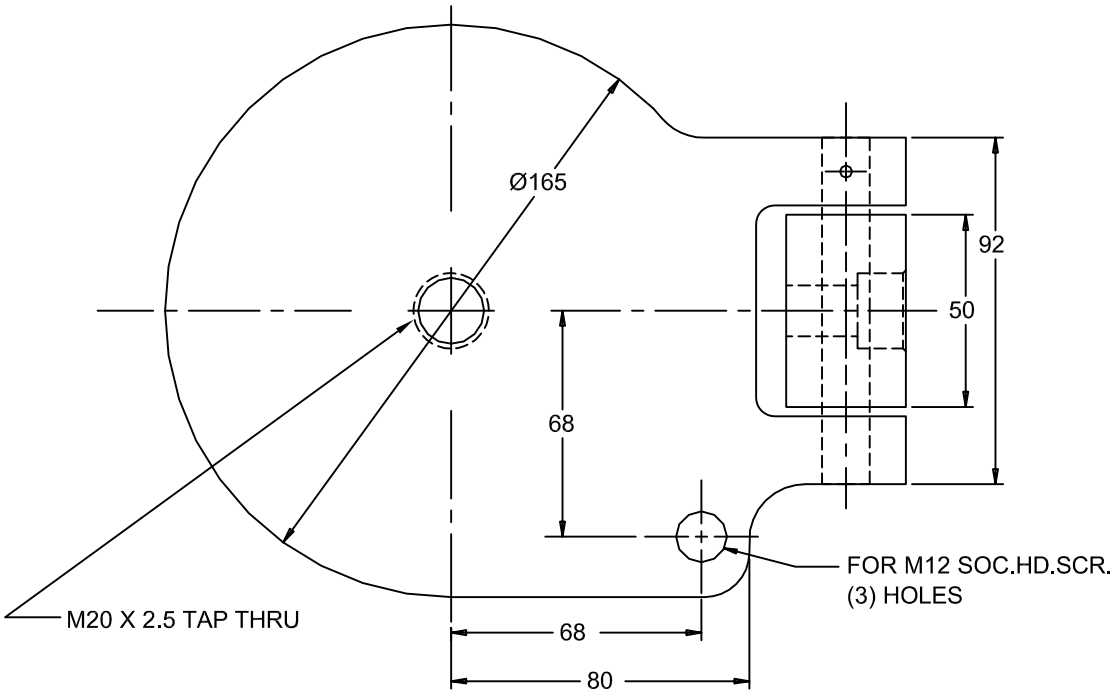

MATERIAL:
CAST ALLOY ALUMINUM

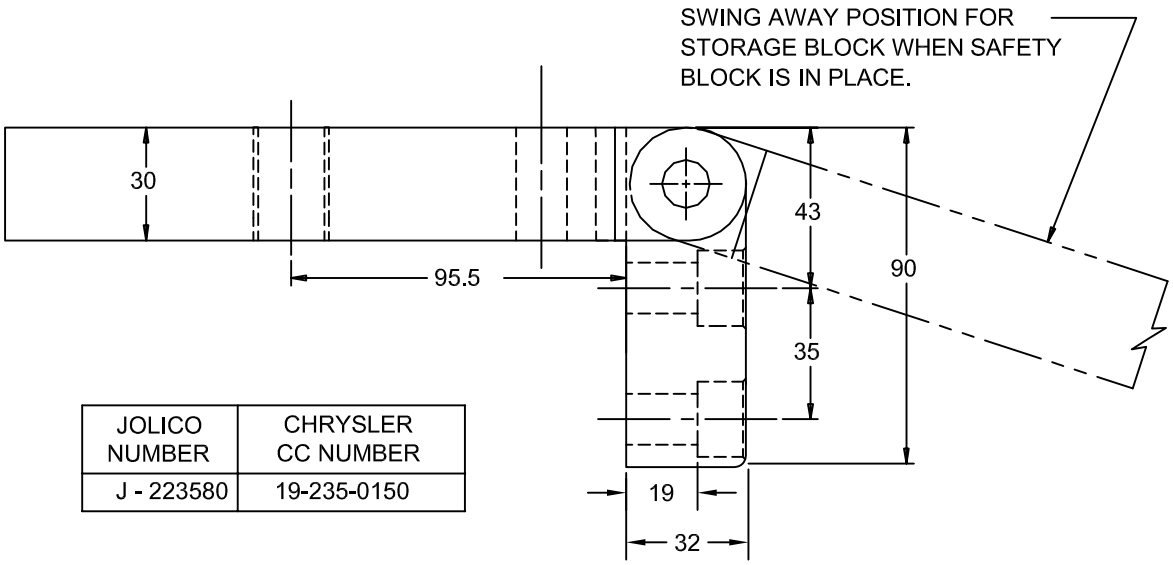

JOLICO NUMBER	CHRYSLER CC NUMBER
J - 223580	19-235-0150

JOLICO J-B TOOL

PRINTED COPY IS UNCONTROLLED

METRIC MASTER KEYS

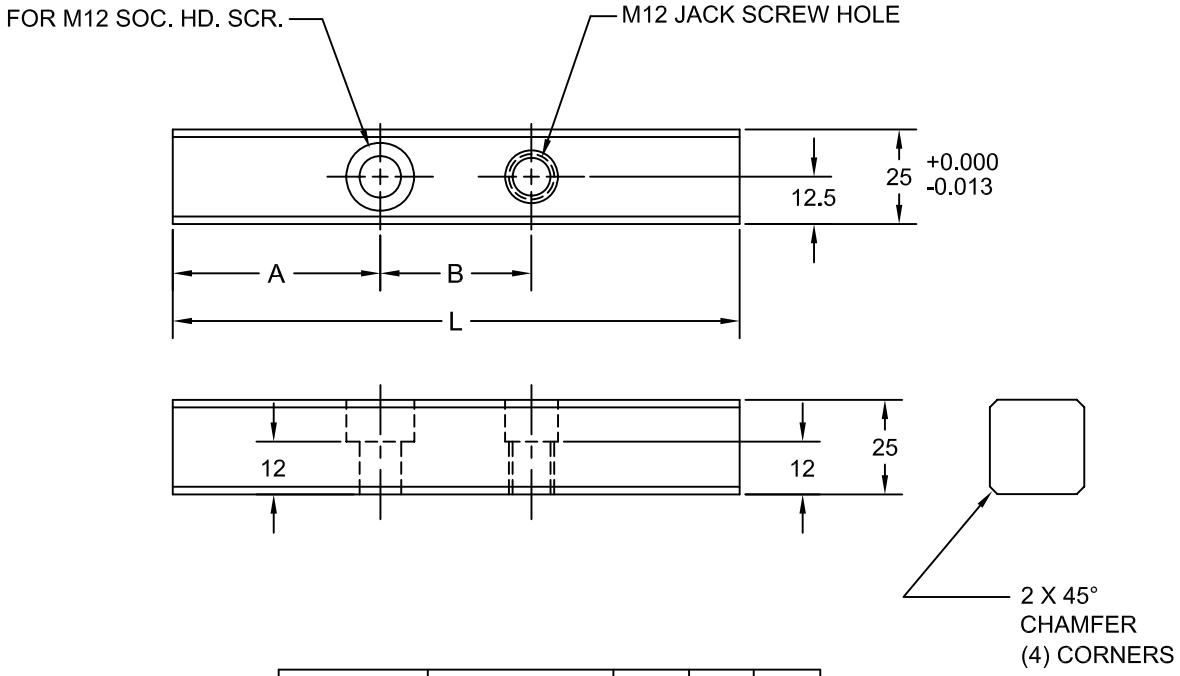

JOLICO NUMBER	CHRYSLER CC NUMBER	L DIM.	A DIM.	B DIM.
J-996417	19-010-9417	75	18	30
J-996418	19-010-9418	100	30	40
J-996419	19-010-9419	150	55	40

JOLICO J-B TOOL

PRINTED COPY IS UNCONTROLLED

SOLID AND STANDARD KEYS

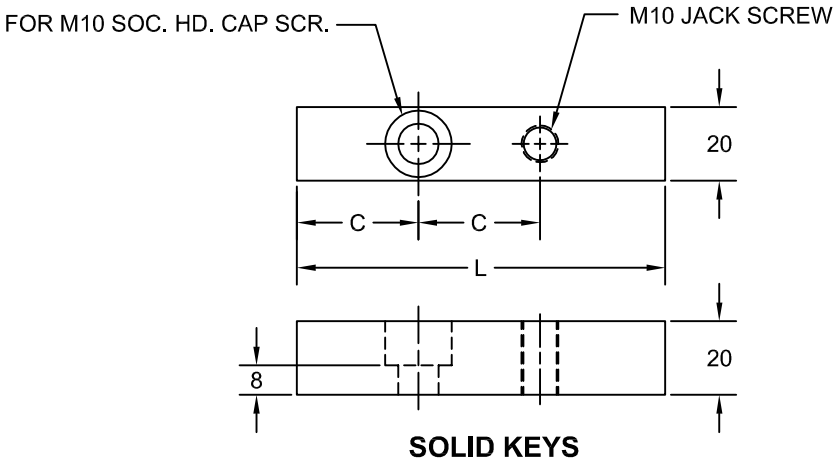

SOLID KEYS

JOLICO NUMBER	CHRYSLER CC NUMBER	L DIM.	C DIM.
J-996409	19-010-9426	75	25
J-996410	19-010-9427	100	33
J-996411	19-010-9428	125	42
J-996412	19-010-9429	150	50

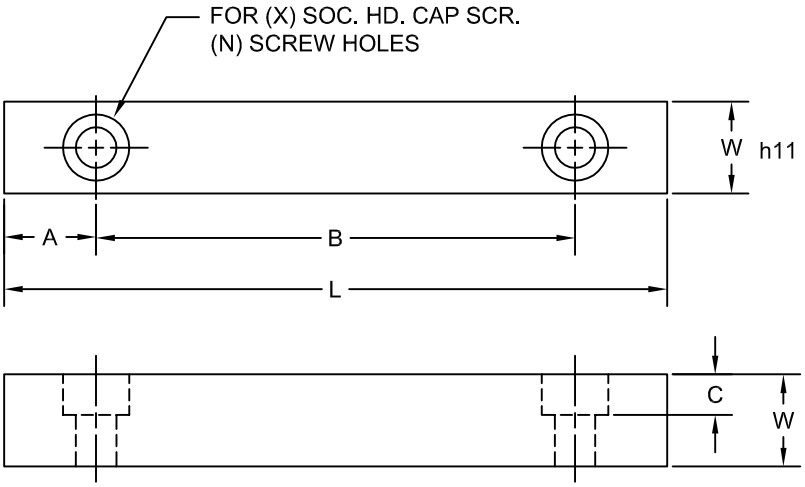

STANDARD KEYS

JOLICO NUMBER	CHRYSLER CC NUMBER	W DIM.	L DIM.	A DIM.	B DIM.	C DIM.	SCREW SIZE (X)	NUMBER OF (N) SCREW HOLES
J-996443	19-010-0089	25	80	40.0		12	M10	1
J-996430	19-010-9430	25	125	62.5		11	M10	1
J-996431	19-010-9431	25	180	25.0	130	11	M10	2
J-996438	19-010-0088	30	80	40.0	120	12	M10	1
J-996432	19-010-9432	30	125	62.5		13	M12	1
J-996433	19-010-9433	30	180	30.0	120	13	M12	2

JOLICO J-B TOOL

PRINTED COPY IS UNCONTROLLED

INCH MASTER KEYS

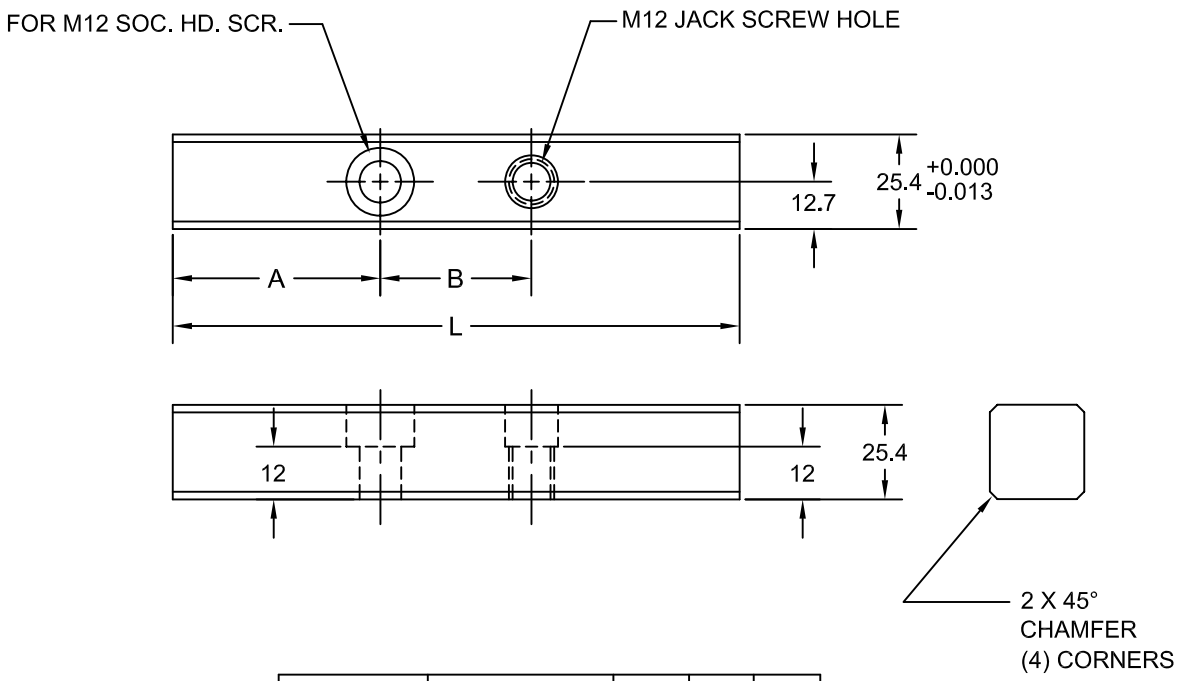

JOLICO NUMBER	CHRYSLER CC NUMBER	L DIM.	A DIM.	B DIM.
J-996426	19-010-9420	75	18	30
J-996427	19-010-9421	100	30	40
J-996428	19-010-9422	150	55	40

JOLICO J-B TOOL

PRINTED COPY IS UNCONTROLLED

DIE IDENTIFICATION PLAT ASSEMBLY

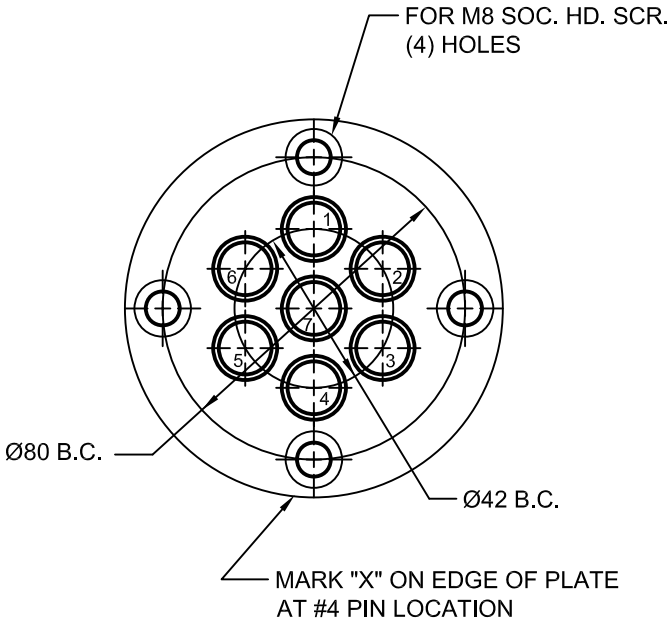

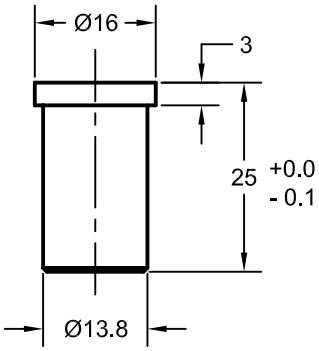

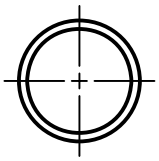

DETECTIVE CAM

IS TO BE STAMP
ONE THRU SEVEN

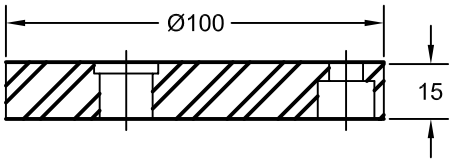

JOLICO NUMBER	CHRYSLER CC NUMBER
J-779670	19-010-2075

JOLICO J-B TOOL

PRINTED COPY IS UNCONTROLLED

QUICK CHANGE RUN NUMBER STAMP HOUSING

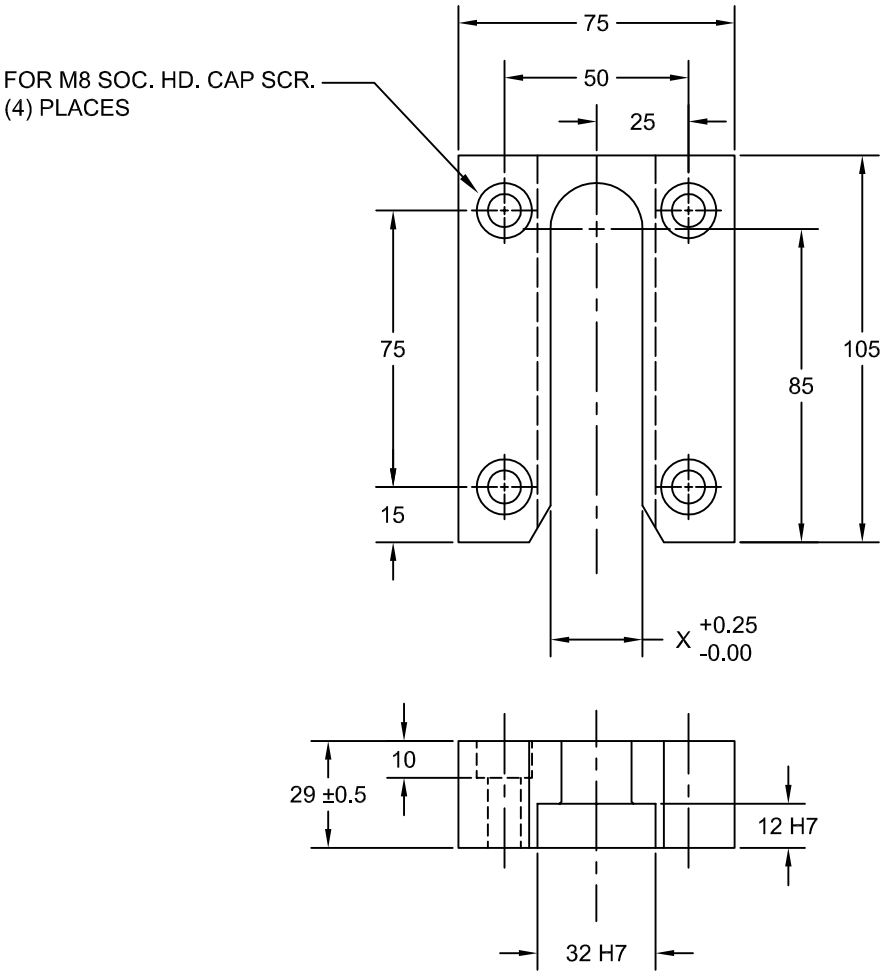

JOLICO NUMBER	CHRYSLER CC NUMBER	X
J-661630	19-010-0162	19
J-661631	19-010-0163	25

JOLICO J-B TOOL

PRINTED COPY IS UNCONTROLLED

RIGHT ANGLE Ø47 SENSOR BRACKETS

JOLICO NUMBER	CHRYSLER CC NUMBER
J-777235	19-010-0190

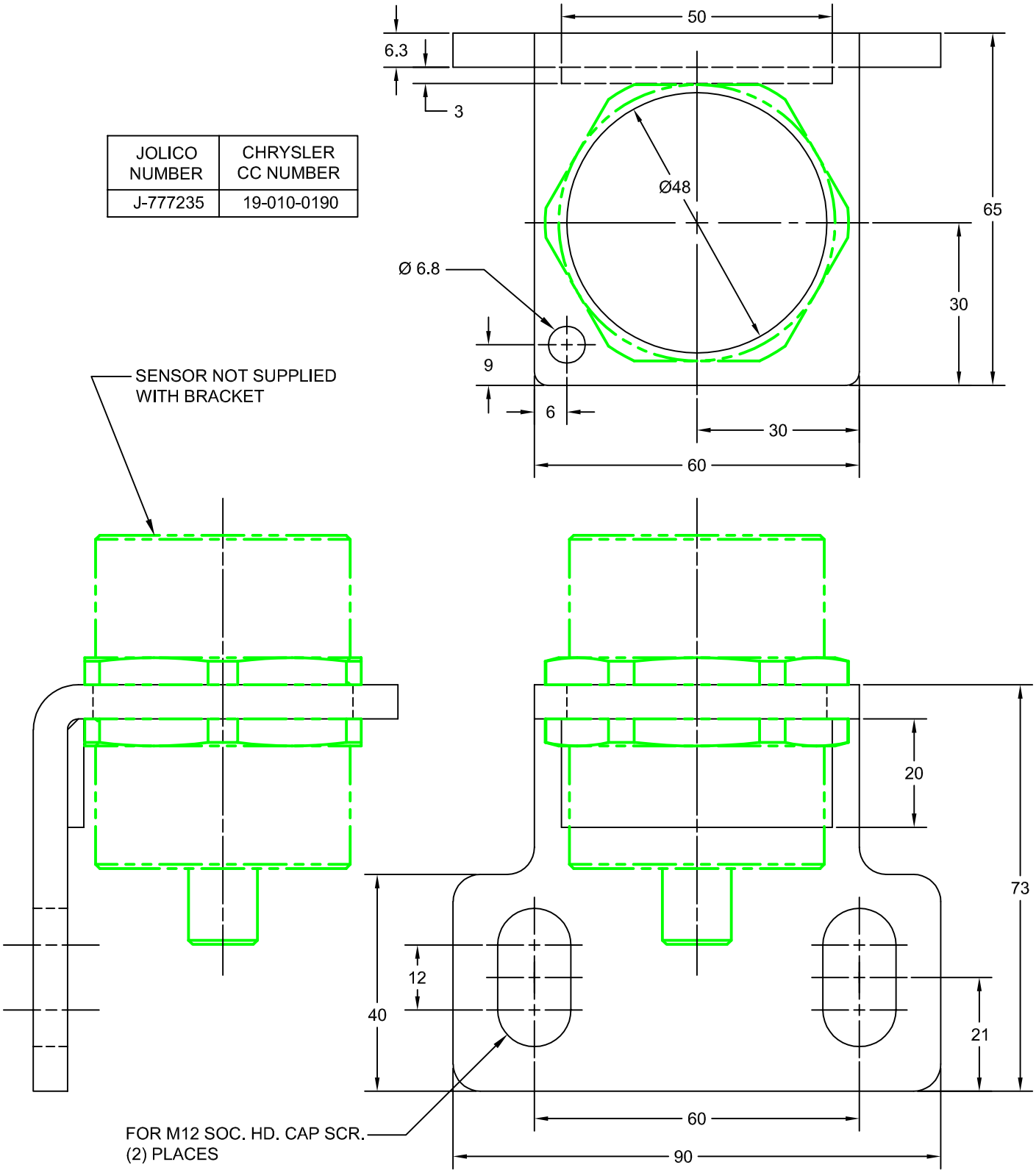

JOLICO J-B TOOL

PRINTED COPY IS UNCONTROLLED

STOP BLOCK

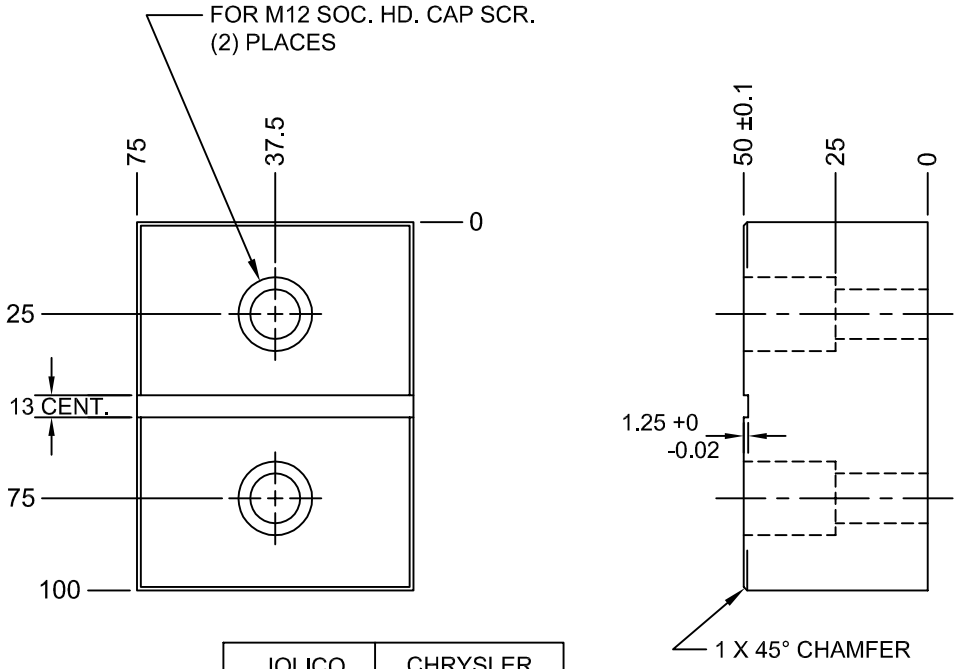

JOLICO NUMBER	CHRYSLER CC NUMBER
J-228251	19-235-0151

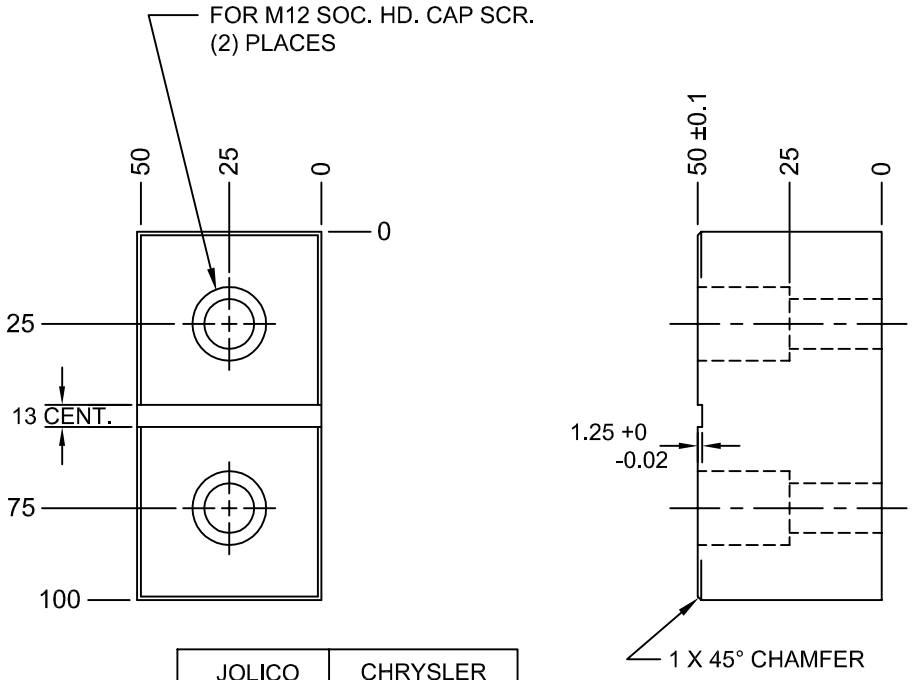

JOLICO NUMBER	CHRYSLER CC NUMBER
J-228252	19-235-0152

JOLICO J-B TOOL

PRINTED COPY IS UNCONTROLLED

CENTERING PIN

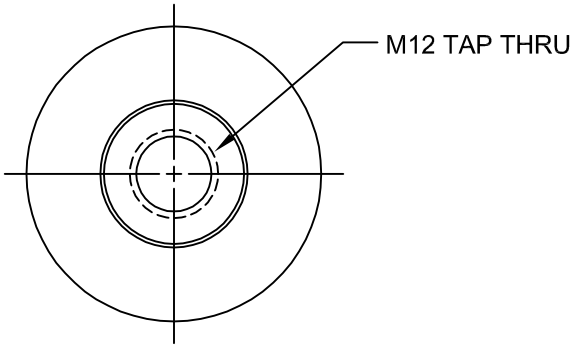

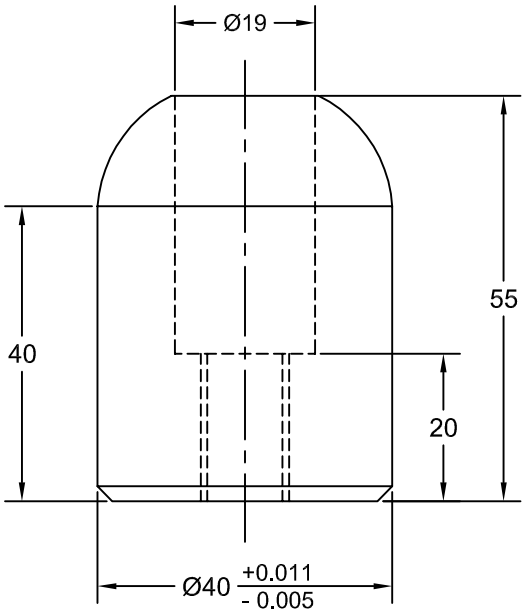

JOLICO NUMBER	CHRYSLER CC NUMBER
J-228542	19-010-0104

JOLICO J-B TOOL

PRINTED COPY IS UNCONTROLLED

AIR COUPLING BRACKET

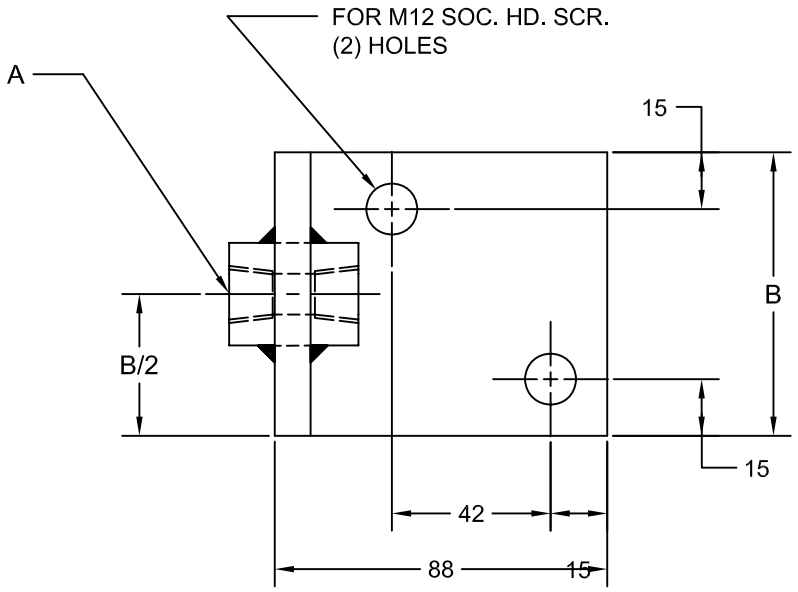

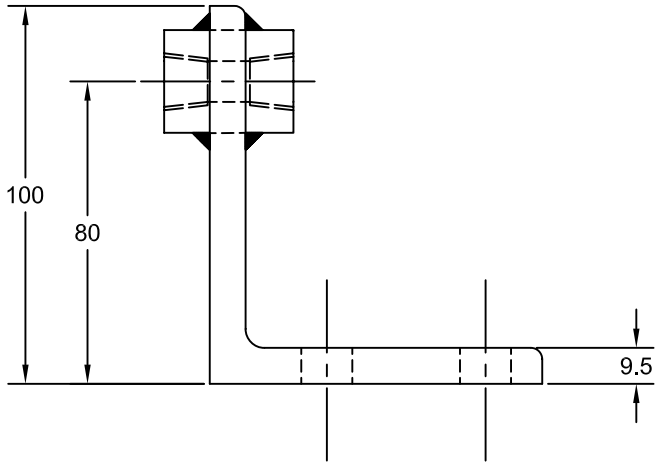

JOLICO NUMBER	CHRYSLER CC NUMBER	A TAP SIZE	B DIM.
J-221203	19-010-9703	3/8" NPTF	50
J-221204	19-010-9704	1/2" NPTF	75

JOLICO J-B TOOL

PRINTED COPY IS UNCONTROLLED

TRUNNION MOUNTING BASE AND PILLOW BLOCKS

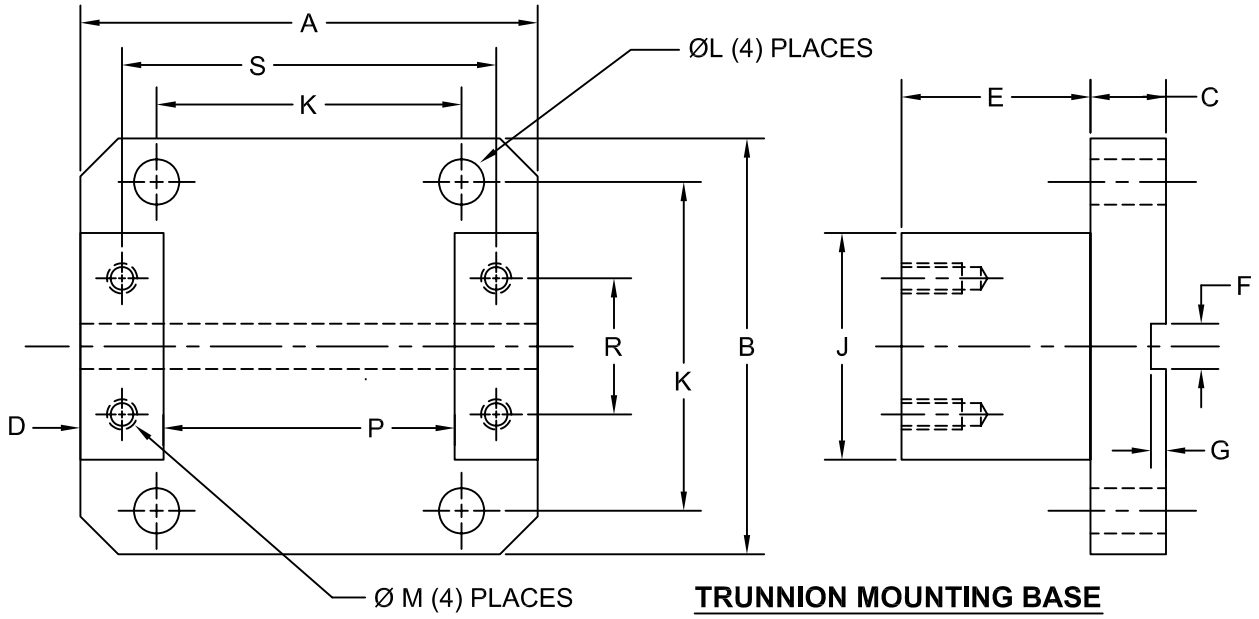

TRUNNION MOUNTING BASE

JOLICO NUMBER	CHRYSLER CC NUMBER	BORE SIZE	A	B	C	D	E	F	G	J	K	L	M	P	R	S
J-998805	39-295-1040	32	91	90	20	20	25	12	4	50	71	9	M6	51	32	71
J-998806	39-295-1140	40	110	121	20	22	50	12	4	60	87	12	M8	66	36	88
J-998807	39-295-1240	50	121	110	20	22	50	12	4	60	87	12	M8	77	36	99
J-998808	39-295-1340	63	140	160	25	24	63	14	4.5	70	116	14	M10	92	42	116
J-998809	39-295-1440	80	160	140	25	24	63	14	4.5	70	116	14	M10	112	42	136
J-998810	39-295-1540	100	200	228	30	35	89	14	4.5	90	164	18	M12	130	50	165
J-998811	39-295-1640	125	228	200	30	35	89	14	4.5	90	164	18	M12	158	50	193
J-998812	39-295-1740	160	282	332	38	37	120	20	6	100	241	18	M16	208	60	245
J-998813	39-295-1840	200	332	282	38	37	120	20	6	100	241	18	M16	258	80	295

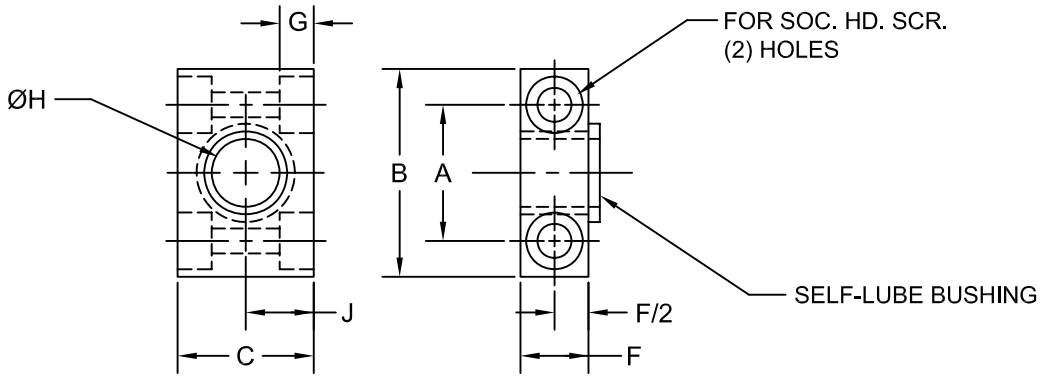

TRUNNION MOUNTING PILLOE BLOCK

JOLICO NUMBER	CHRYSLER CC NUMBER	BORE SIZE	A	B	C	F	G	H	J	SCREW SIZE
J-998820	39-295-1050	32	32	46	45	15	8	12	15	M6
J-998821	39-295-1150	40/50	36	55	54	18	9	16	18	M8
J-998822	39-295-1350	63/80	42	65	60	20	11	20	20	M10
J-998823	39-295-1550	100/125	50	75	75	25	13	25	25	M12
J-998824	39-295-1950	160/200	60	92	90	36	17	32	30	M16

JOLICO J-B TOOL

PRINTED COPY IS UNCONTROLLED

NITROGEN STRIKER PLATE ROUND

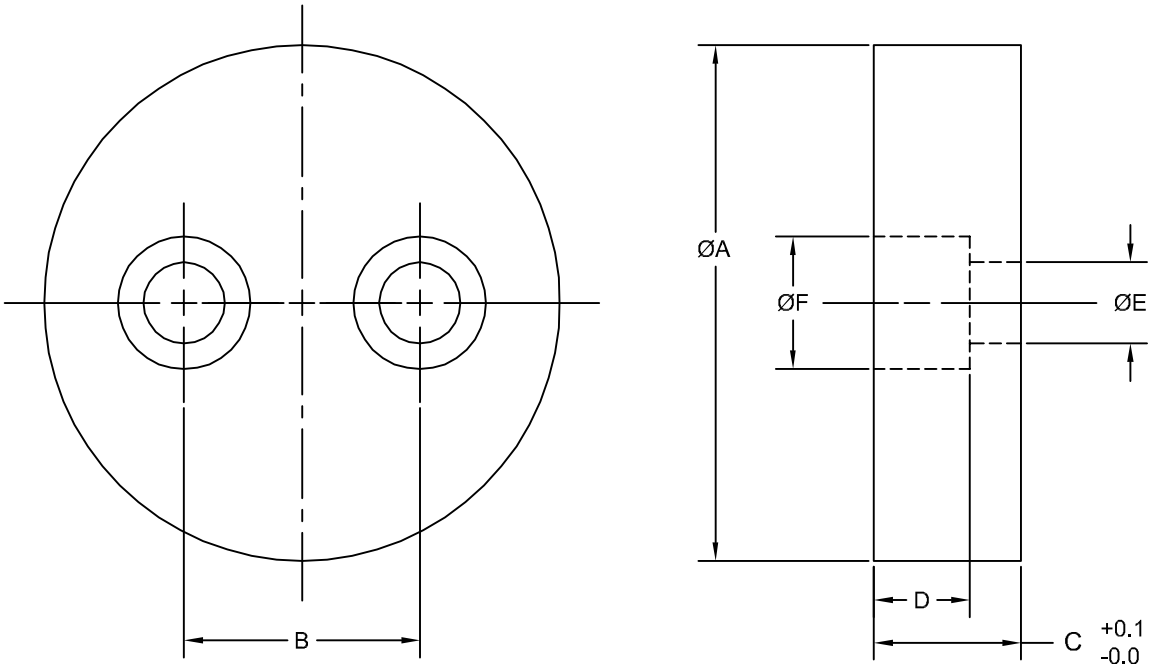

JOLICO NUMBER	CHRYSLER CC NUMBER	PISTON ROD DIA.	A	B	C	D	E	F
J-449390	19-010-0155	15 MAX.	50	21	15	10	9	15
J-449391	19-010-0149	25 MAX.	70	32	20	13	11	18
J-449392	19-010-0148	50 MAX.	94	48	20	13	11	18
J-449380	19-001-0079	128 MAX.	130	80	25	13	13.5	20

JOLICO J-B TOOL

PRINTED COPY IS UNCONTROLLED

NITROGEN STRIKER PLATES RECTANGLE & SQUARE

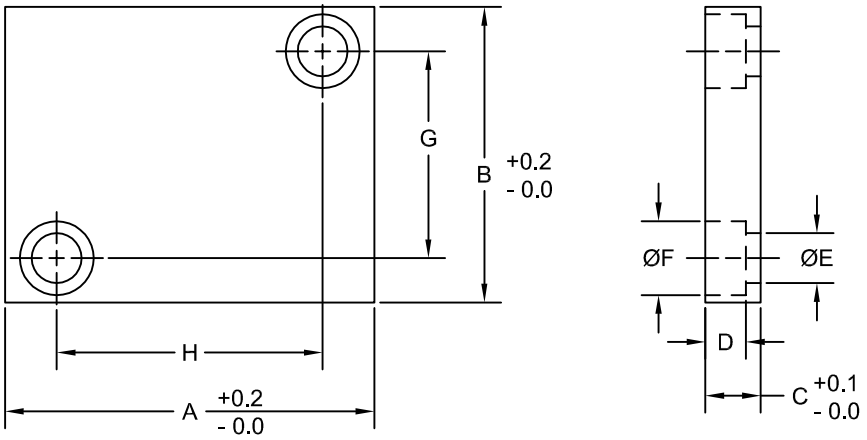

NITROGEN STRIKER PLATE RECTANGLE

JOLICO NUMBER	CHRYSLER CC NUMBER	PISTON ROD DIA.	A	B	C	D	E	F	G	H
J - 449450	19-010-0147	Ø15	50	25	12	7	7	11	8	32
J - 449451	19-010-0144	Ø20	50	30	12	7	7	11	14	35
J - 449452	19-010-0146	Ø25	70	35	15	9	9	15	14	48
J - 449453	19-010-0143	Ø36	75	50	15	9	9	15	30	56
J - 449454	19-010-0142	Ø50	85	60	15	9	9	15	40	56
J - 449455	19-010-0141	Ø65	100	80	20	11	11	18	56	72
J - 449456	19-010-0139	Ø95	110	100	20	11	11	18	75	85

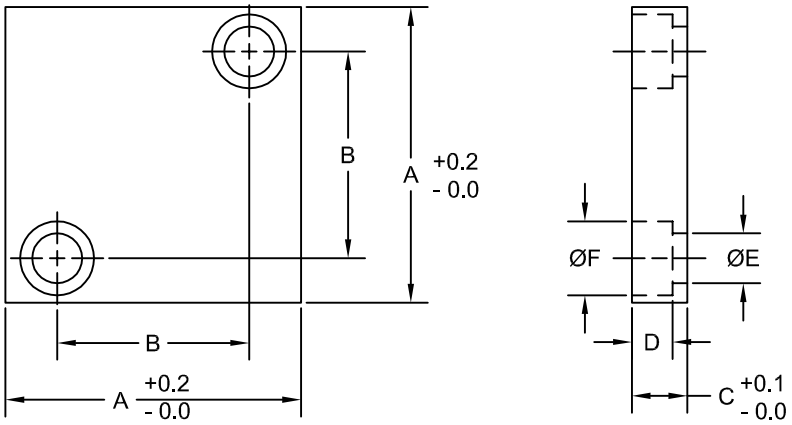

NITROGEN STRIKER PLATE SQUARE

JOLICO NUMBER	CHRYSLER CC NUMBER	PISTON ROD DIA.	A	B	C	D	E	F
J - 449460	19-010-0151	Ø15	40	21	15	10	9	15
J - 449461	19-010-0154	Ø25	56	32	20	13	11	18
J - 449462	19-010-0153	Ø50	71	48	20	13	11	18
J - 449463	19-010-0152	Ø65	90	67	20	13	11	18
J - 449464	19-010-0150	Ø95	140	110	20	13	11	18

JOLICO J-B TOOL

PRINTED COPY IS UNCONTROLLED

DIE LOCATOR PIN

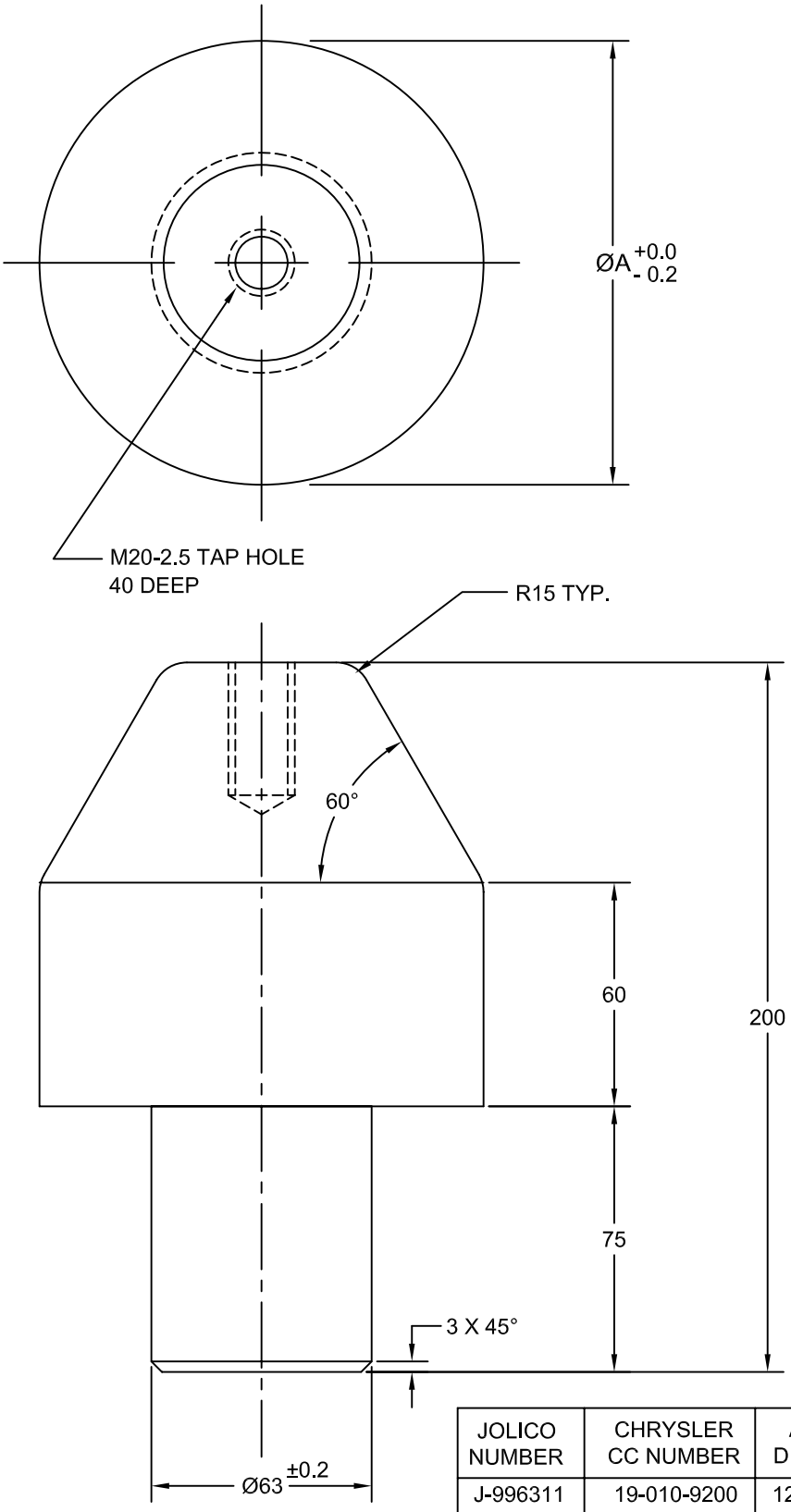

JOLICO NUMBER	CHRYSLER CC NUMBER	A DIM.
J-996311	19-010-9200	127
J-996321	19-010-9205	153

JOLICO J-B TOOL

PRINTED COPY IS UNCONTROLLED

CHRYSLER DIE LOCATOR PIN

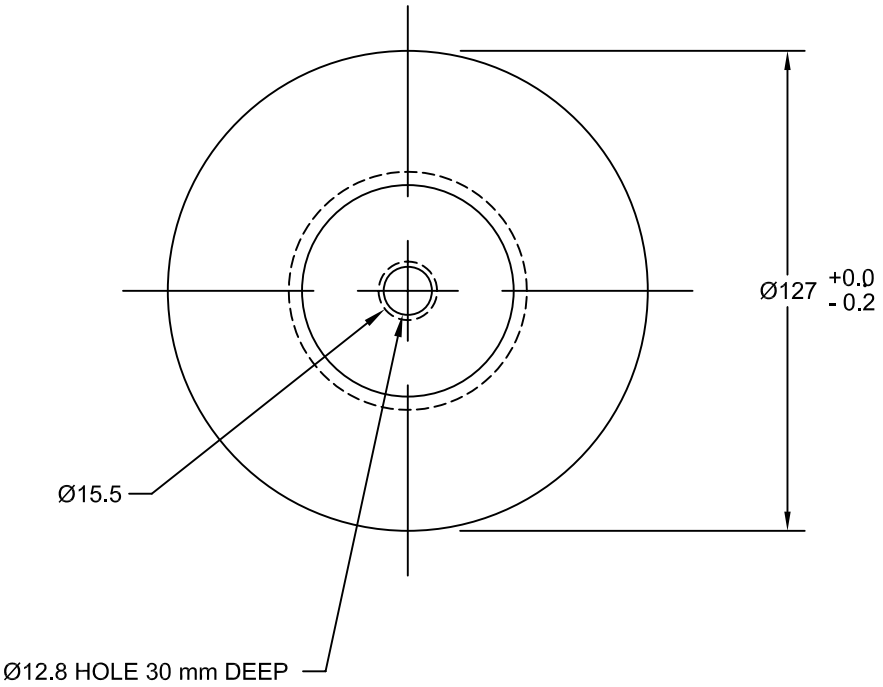

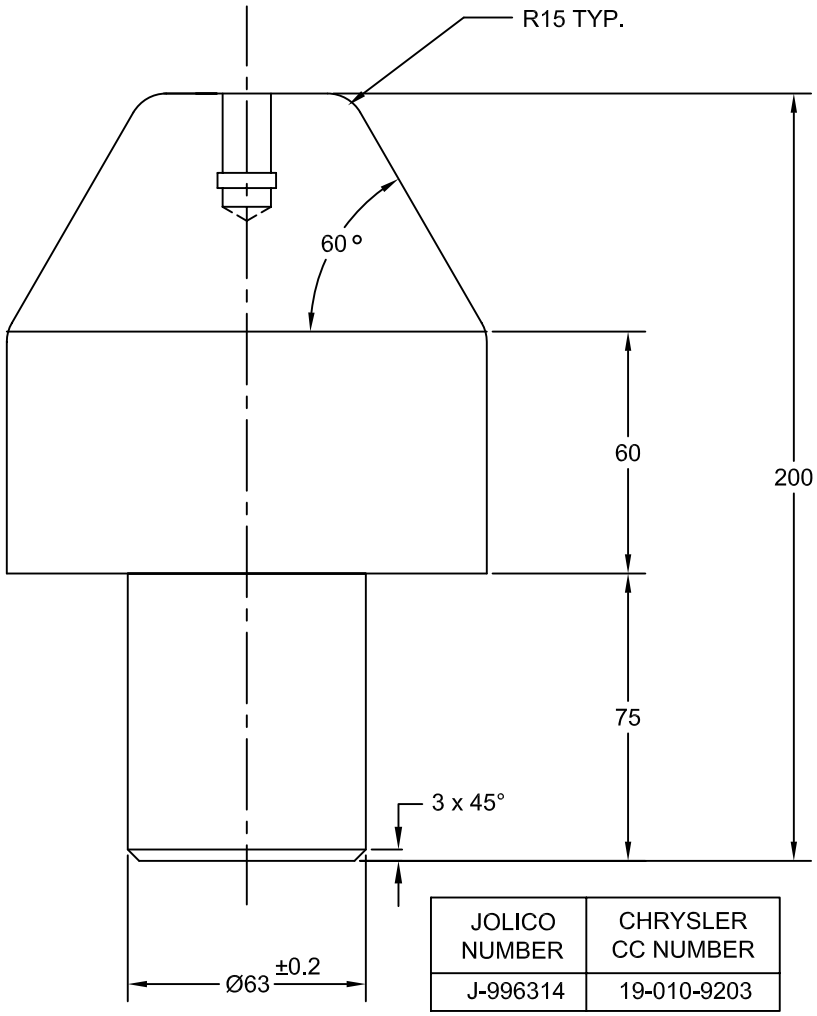

JOLICO NUMBER	CHRYSLER CC NUMBER
J-996314	19-010-9203

JOLICO J-B TOOL

PRINTED COPY IS UNCONTROLLED

DIE WASHER FOR BUILD-UP AND FASTENING

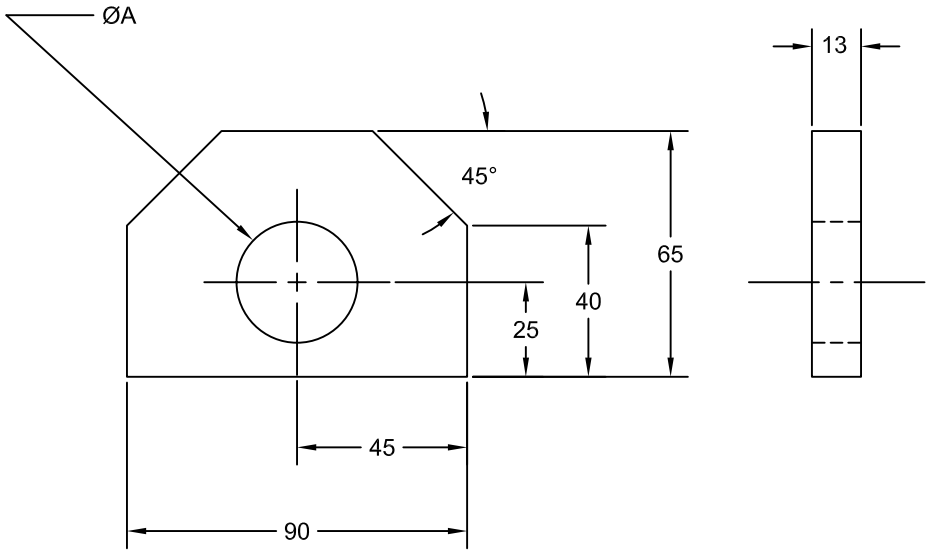

DIE BUILD-UP WASHER

JOLICO NUMBER	CHRYSLER CC NUMBER	A DIM.
J-112002	19-235-0050	27
J-112004	19-235-0100	32

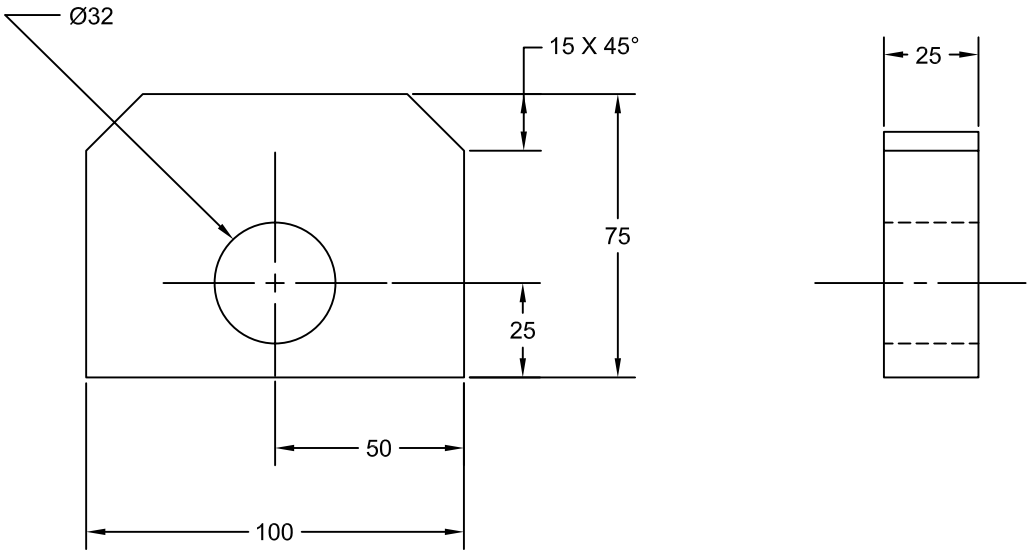

DIE FASTENING WASHER

JOLICO NUMBER	CHRYSLER CC NUMBER
J-112003	19-235-0110

JOLICO J-B TOOL

PRINTED COPY IS UNCONTROLLED

SPRING WASHER

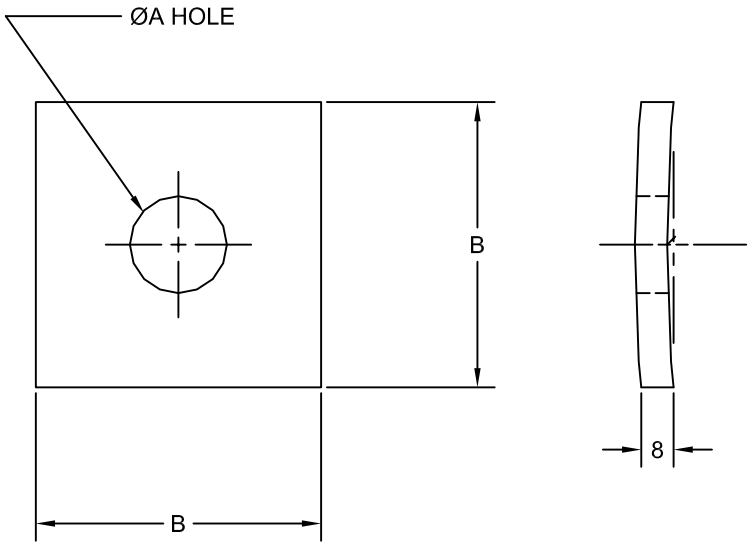

JOLICO NUMBER	CHRYSLER CC NUMBER	A DIM.	B DIM.
J-112041	19-235-0115	22	50
J-112040	19-235-0120	26	57

JOLICO J-B TOOL

PRINTED COPY IS UNCONTROLLED

FASTENING PLATE FOR AUTOMATIC CLAMP (FIXED ONLY)

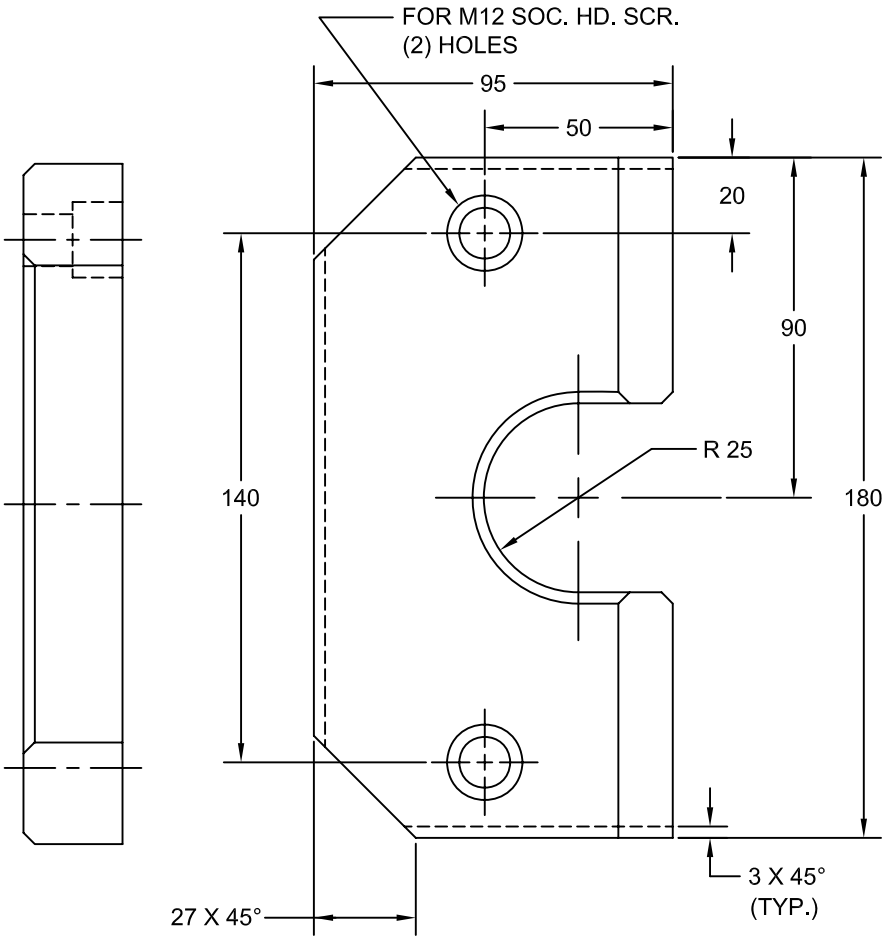

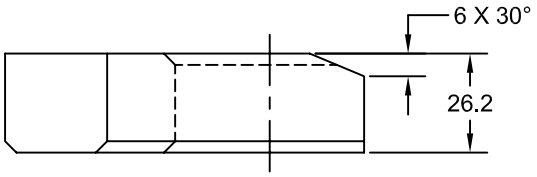

JOLICO NUMBER	CHRYSLER CC NUMBER
J-112009	19-010-9300

JOLICO J-B TOOL

PRINTED COPY IS UNCONTROLLED

AUTOMATIC ROTARY CLAMP PLATE

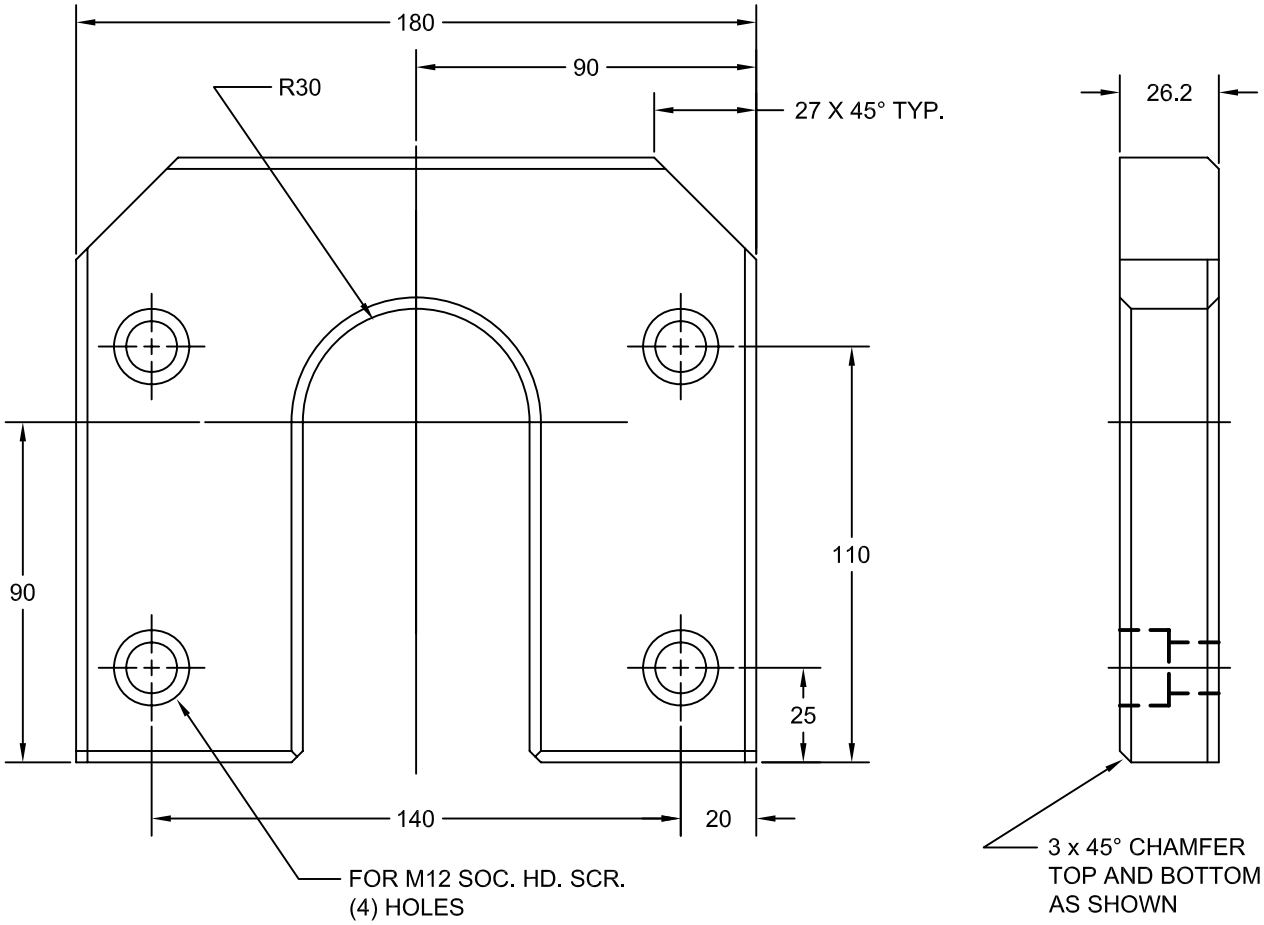

JOLICO NUMBER	CHRYSLER CC NUMBER
J-112008	19-010-9305

JOLICO J-B TOOL

PRINTED COPY IS UNCONTROLLED

DIE LIFT PIN WITH SPRING RETAINER RING AND CAST LINER

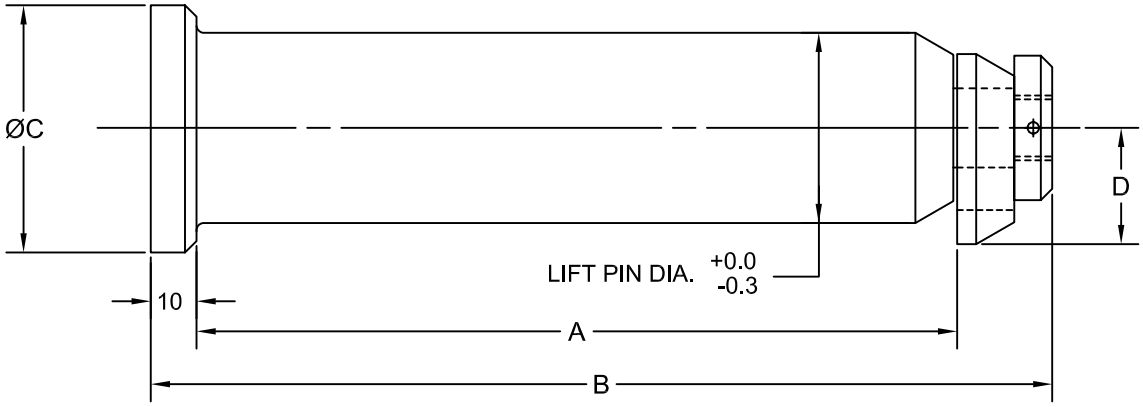

DIE LIFT PIN WITH SPRING RETAINER RING

JOLICO NUMBER	CHRYSLER CC NUMBER	LIFT PIN DIA.	A	B	C	D	MAX. DIE WGHIT IN U. S. TONS
J-881420	19-255-0200	50	190	230	63	31	20 TONS
J-881421	19-255-0252	63	280	320	76	37.5	40 TONS
J-881422	19-255-0320	80	320	370	89	46	80 TONS

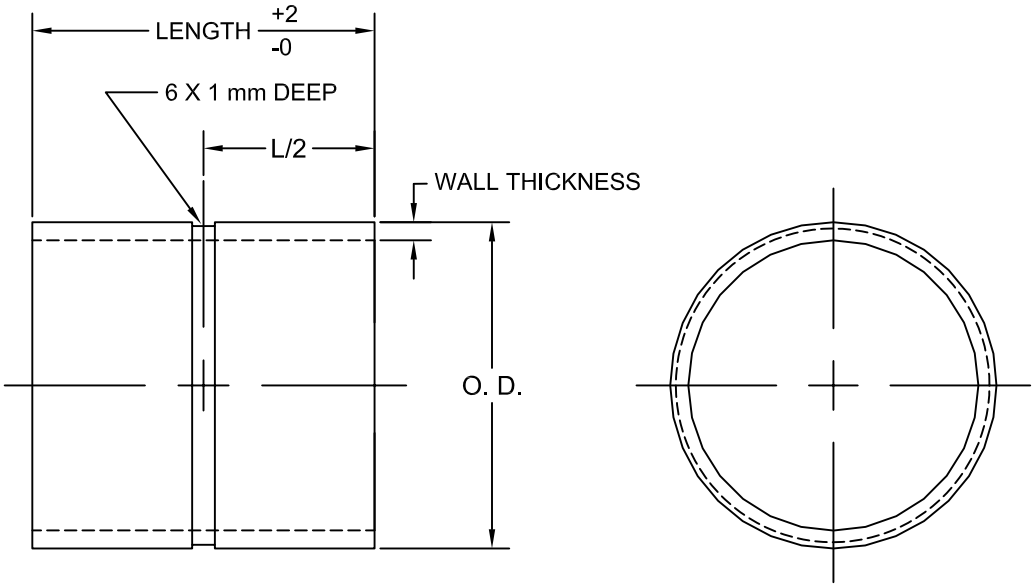

CAST LINER

JOLICO NUMBER	CHRYSLER CC NUMBER	LIFT PIN DIA.	LENGTH	TUBING SIZE IN INCHES	
				OUTSIDE DIA.	WALL THICKNESS
J-881450	19-232-0200	50	50	2 - 3/8	.156
J-881454	19-232-0201	50	65	2 - 3/8	.156
J-881451	19-232-0252	63	80	2 - 7/8	.156
J-881455	19-232-0253	63	120	2 - 7/8	.156
J-881452	19-232-0320	80	100	3 - 5/8	.188
J-881456	19-232-0321	80	130	3 - 5/8	.188

JOLICO J-B TOOL

PRINTED COPY IS UNCONTROLLED

CAST IN THREADED INSERTS
SINGLE SIDE THREADS

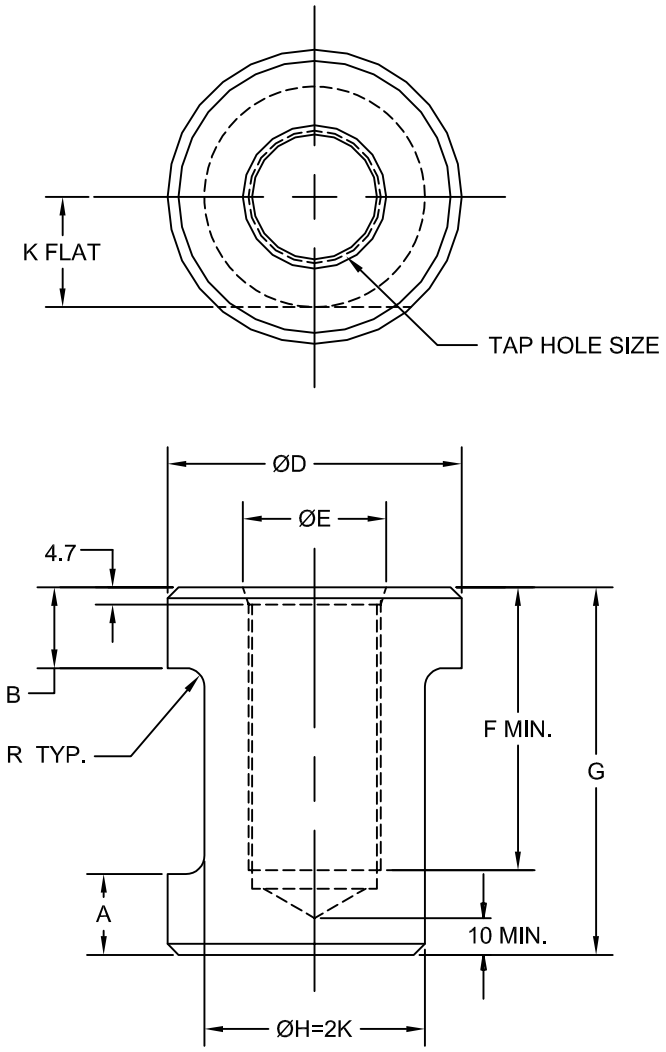

JOLICO NUMBER	CHRYSLER CC NUMBER	TAP HOLE SIZE	A	B	R	D	E	F	G	K FLAT
J - 449286	19-235-0149	M22 X 2.5	16	12	2	65	26	57	75	20
J - 449281	19-235-0148	M24 X 3.0	16	12	2	65	26	57	75	20
J - 449282	19-235-0147	M30 X 3.5	20	20	5	85	33	67	90	30
J - 449283	19-235-0146	M36 X 4.0	22	22	5	107	39	77	100	40
J - 449285	19-235-0145	M42 X 4.5	25	25	5	107	45	95	130	40

JOLICO J-B TOOL

PRINTED COPY IS UNCONTROLLED

DIE IDENTIFICATION PLATES

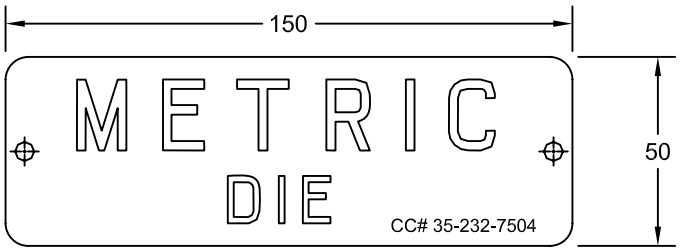

METRIC DIE IDENTIFICATION

JOLICO NO.	CHRYSLER CC NO.	LANGUAGE
J-13414	35-232-7504	ENGLISH
J-113813	35-232-7604	SPANISH

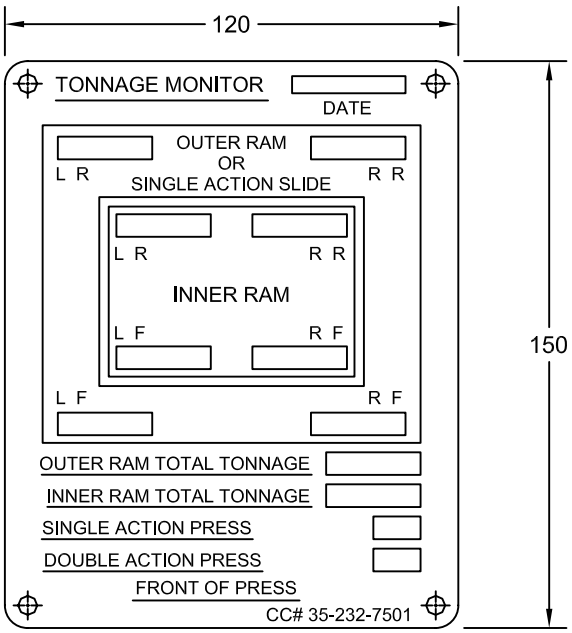

TONNAGE MONITOR I.D. PLATE

JOLICO NO.	CHRYSLER CC NO.
J-113807	35-232-7501

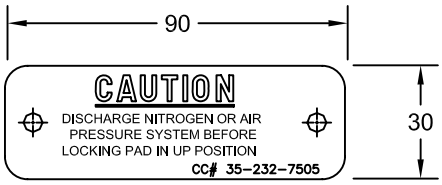

LOCK-UP KEEPER CAUTION PLATES

JOLICO NO.	CHRYSLER CC NO.	LANGUAGE
J-13415	35-232-7505	ENGLISH
J-113814	35-232-7605	SPANISH

JOLICO J-B TOOL

PRINTED COPY IS UNCONTROLLED

DIE INFORMATION PLATES

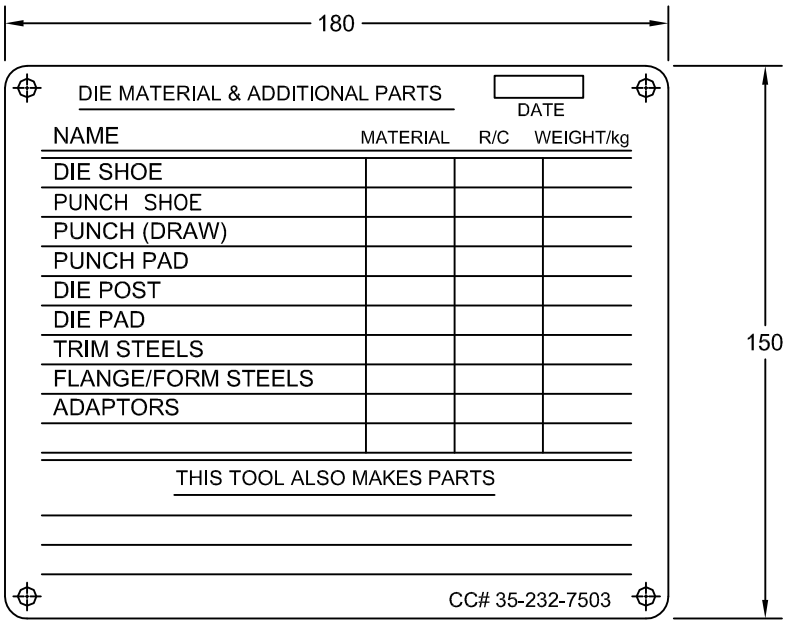

DIE MATERIAL / TOOL ALSO MAKES I.D. PLATE

JOLICO NO.	CHRYSLER CC NO.	LANGUAGE
J-113809	35-232-7503	ENGLISH
J-113816	35-232-7603	SPANISH

JOLICO J-B TOOL

PRINTED COPY IS UNCONTROLLED

DIE INFORMATION PLATES

180

250

PRESSURE INFORMATION

DATE

PART NO _____ DIE NO _____

PART NAME _____ SERIES _____

DIE WEIGHT: (TOTAL) _____ UPPER ONLY _____ PUNCH _____

DIE SPRINGS

LOWER SHOE: TYPE _____ DIA x _____ LG _____ /AMT ____

TYPE _____ DIA x _____ LG _____ /AMT ____

UPPER SHOE: TYPE _____ DIA x _____ LG _____ /AMT ____

TYPE _____ DIA x _____ LG _____ /AMT ____

NITROGEN SYSTEM

LOWER SHOE: TYPE _____ BORE x _____ STRK _____ /AMT ____

TYPE _____ BORE x _____ STRK _____ /AMT ____

UPPER SHOE: TYPE _____ BORE x _____ STRK _____ /AMT ____

TYPE _____ BORE x _____ STRK _____ /AMT ____

AIR CUSHION SYSTEM

LOWER SHOE:

CUSHION TONNAGE AVAIL. _____ WORK TONNAGE REQ'D. _____

NO. OF AIR PINS REQ'D. _____ AIR PIN DIA. _____

CUSHION STROKE _____ PAD TRAVEL _____

"START OF DRAW" DIM. _____ DRAW DEPTH DIM. _____

CUSHION LOCK: YES ☐ NO ☐

PRESSURE PAD BOTTOMS IN THIS DIE

YES ☐ NO ☐

CC# 35-232-7500

JOLICO NO.	CHRYSLER CC NO.	LANGUAGE
J-113810	35-232-7500	ENGLISH
J-113812	35-232-7600	SPANISH

JOLICO J-B TOOL

PRINTED COPY IS UNCONTROLLED

WARNING PLATES

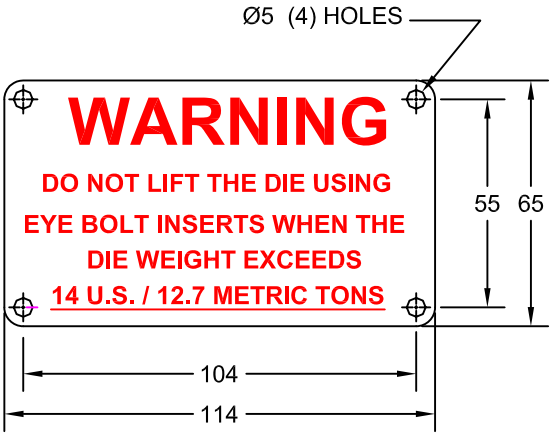

ENGLISH

JOLICO NUMBER	CHRYSLER CC NUMBER
J-114061	35-232-7610

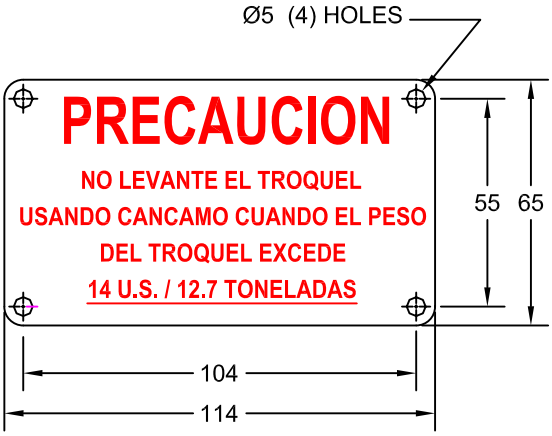

SPANISH

JOLICO NUMBER	CHRYSLER CC NUMBER
J-114071	35-232-7611

JOLICO J-B TOOL

PRINTED COPY IS UNCONTROLLED

WARNING PLATES

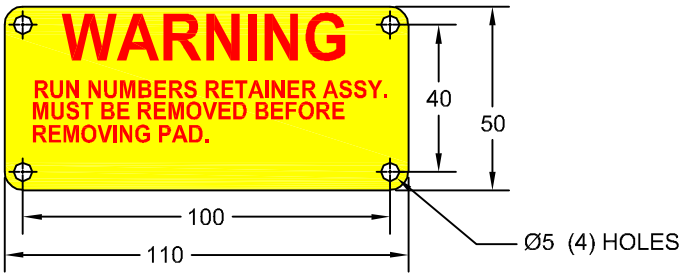

REMOVE RUN NUMBER RETAINER ASSY.

JOLICO NUMBER	CHRYSLER CC NUMBER
J-113062	35-232-0013

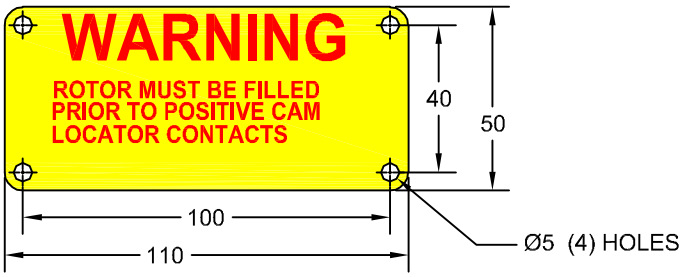

POSITIVE CAM LOCATOR

JOLICO NUMBER	CHRYSLER CC NUMBER
J-114236	35-232-0021

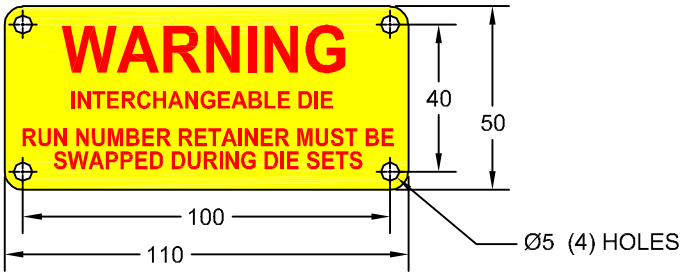

INTERCHANGEABLE DIE

JOLICO NUMBER	CHRYSLER CC NUMBER
J-114225	35-232-0020

JOLICO J-B TOOL

PRINTED COPY IS UNCONTROLLED

WARNING PLATES

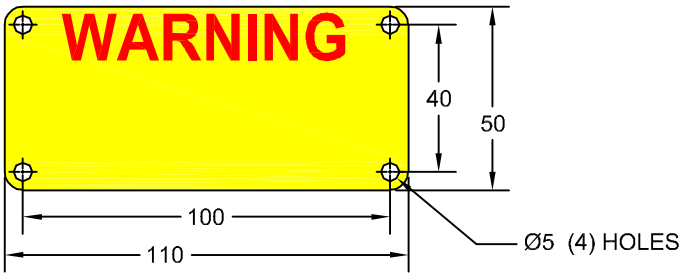

BLANK WARNING PLATE

JOLICO NUMBER	CHRYSLER CC NUMBER
J-113825	35-232-0058

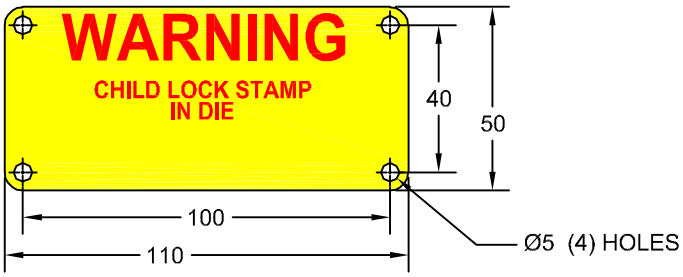

CHILD LOCK STAMP IN DIE

JOLICO NUMBER	CHRYSLER CC NUMBER
J-113824	35-232-0059

JOLICO J-B TOOL

PRINTED COPY IS UNCONTROLLED

IDENTIFICATION PLATES

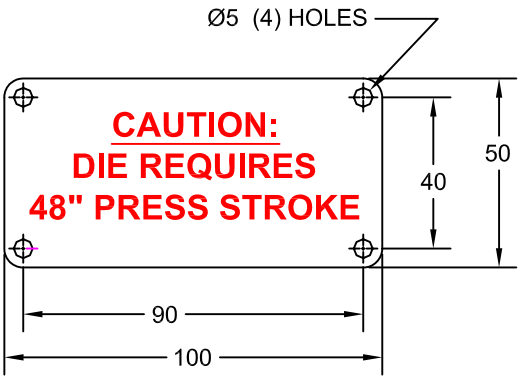

SCHULER 180 PRESS STROKE PLATE

JOLICO NUMBER	CHRYSLER CC NUMBER
J-114080	35-232-7511

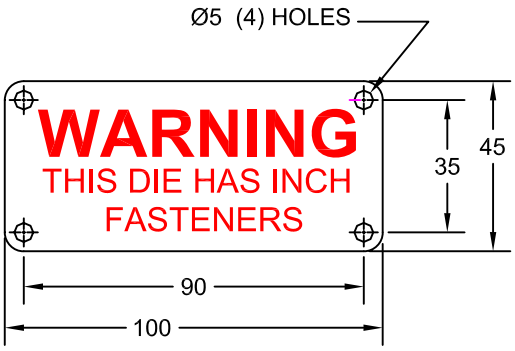

INCH FASTENER WARNING PLATE

JOLICO NUMBER	CHRYSLER CC NUMBER
J-113061	35-232-7613

JOLICO J-B TOOL

PRINTED COPY IS UNCONTROLLED

IDENTIFICATION PLATE

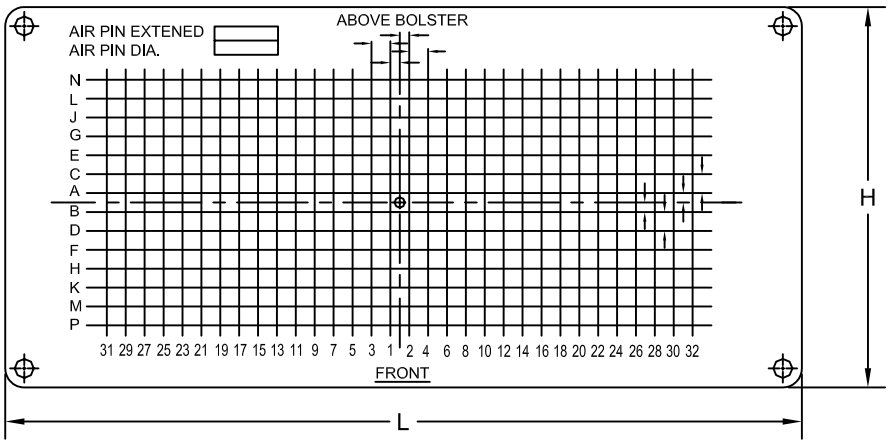

AIR PIN HOLE LOCATION PLATES

JOLICO NUMBER	CHRYSLER CC NUMBER	H	L
J-13023	35-232-7507	57.15 (2.25")	114.3 (4.5")
J-13020	35-232-7508	101.6 (4.0")	209.55 (8..25")

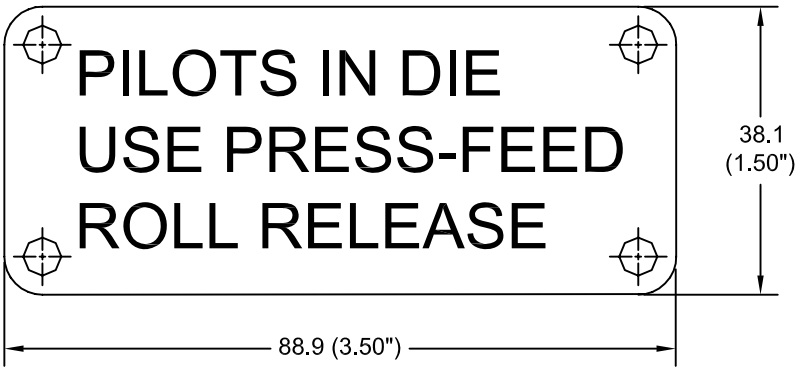

PILOTS IN DIE PLATE

JOLICO NUMBER	CHRYSLER CC NUMBER
J-13199	35-232-7506

JOLICO J-B TOOL

PRINTED COPY IS UNCONTROLLED

PROGRESSIVE DIE IDENTIFICATION PLATE

NOTE:
THE BACKGROUND OF PLATE IS BLACK.
DIE CONSTRUCTION SOURCE TO PAINT INFORMATION ON THE PLATE
WITH WHITE CHARACTERS.

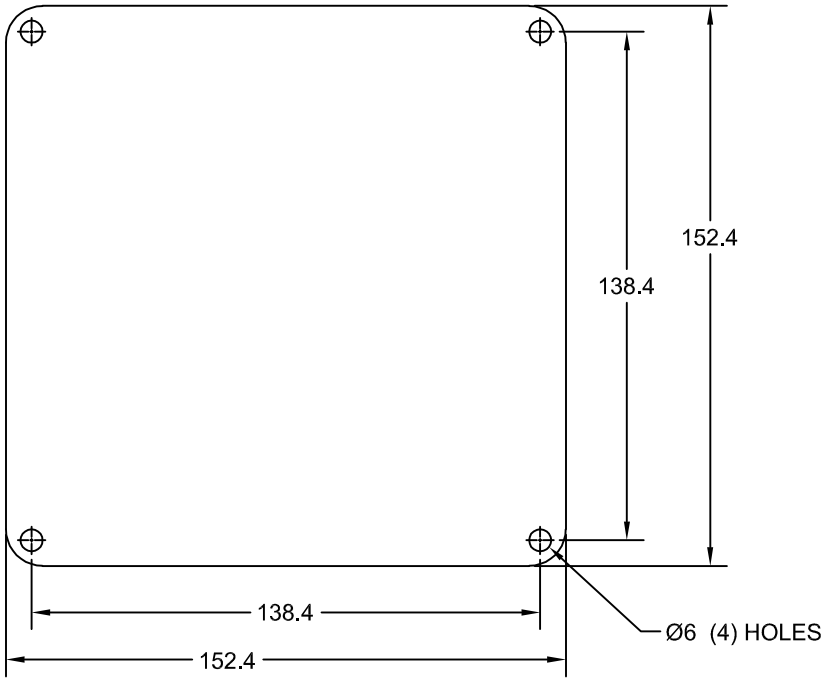

JOLICO NUMBER	CHRYSLER CC NUMBER
J-113063	35-232-0014

JOLICO J-B TOOL

PRINTED COPY IS UNCONTROLLED

OPPOSING PLATES

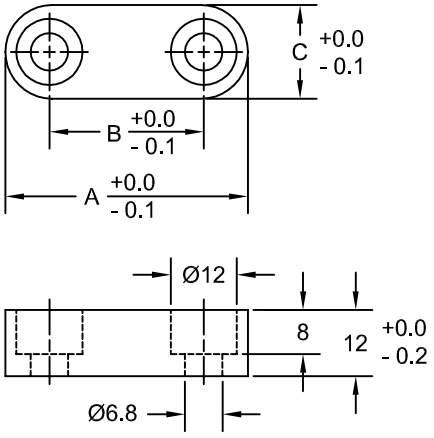

OPPOSING PLATE
TRADEMARK - ROUND & SQUARE

JOLICO NUMBER	CHRYSLER CC NUMBER	"A"	"B"	"C"
J-999212	19-010-0185	44	28	17
J-999213	19-010-0184	52	34	22

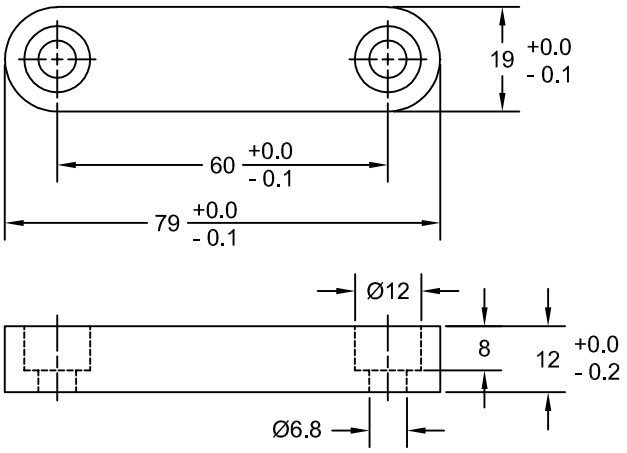

OPPOSING PLATE
PRODUCTION RUN NUMBER
SET RETAINER

JOLICO NUMBER	CHRYSLER CC NUMBER
J-999210	19-010-0186

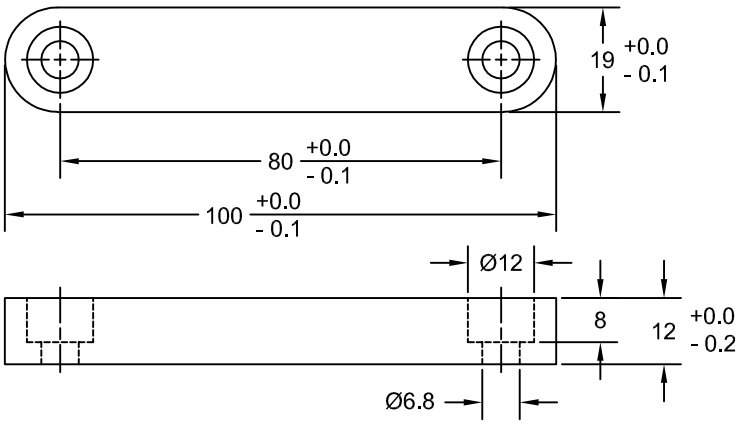

OPPOSING PLATE
COMBINATION PRODUCTION
SET RETAINER

JOLICO NUMBER	CHRYSLER CC NUMBER
J-999211	19-010-0187

JOLICO J-B TOOL

PRINTED COPY IS UNCONTROLLED

PRESSURE INFORMATION PLATE FOR NITROGEN SYSTEMS

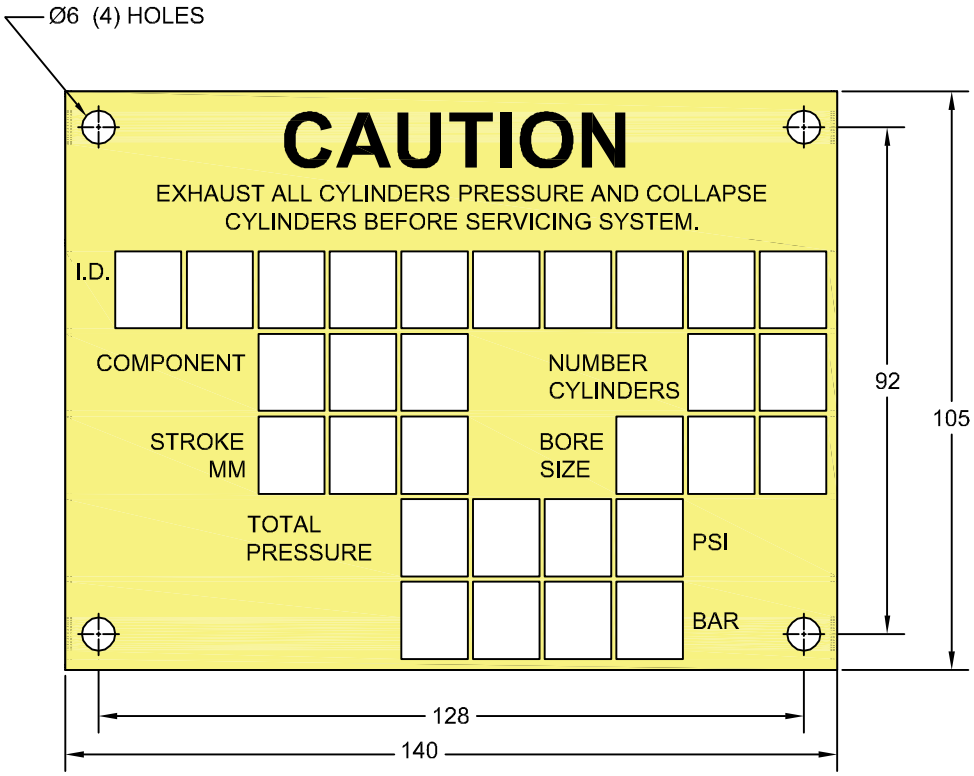

PLATE YELLOW BACKGROUND WITH WHITE BOXES AND BLACK LETTERS

JOLICO NUMBER	COMMODITY CODE
J-114238	35-232-0022